PTC CREO 4.0 HIGHLIGHTS

Christoph von Andrian-Werburg
PTC

Klaus Raab
INNEO

Bayreuth, September 21st

UNIVERSITÄT BAYREUTH

ptc

INNEO®
That's IT.

CREO 4.0

- Model Based Enterprise
- Productivity Improvements
- Design for IoT
- Design for Additive Mfg

CREO 4.0

- Model Based Enterprise
- Productivity Improvements
- Design for IoT
- Design for Additive Mfg

MODEL BASED ENTERPRISE

Improved Authoring

Standards support and Workflow

- **ASME and ISO standard support**
- **Intelligent GD&T**

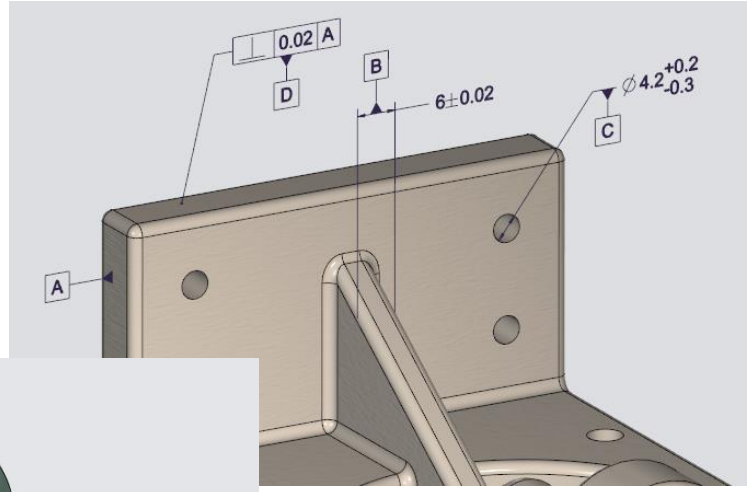

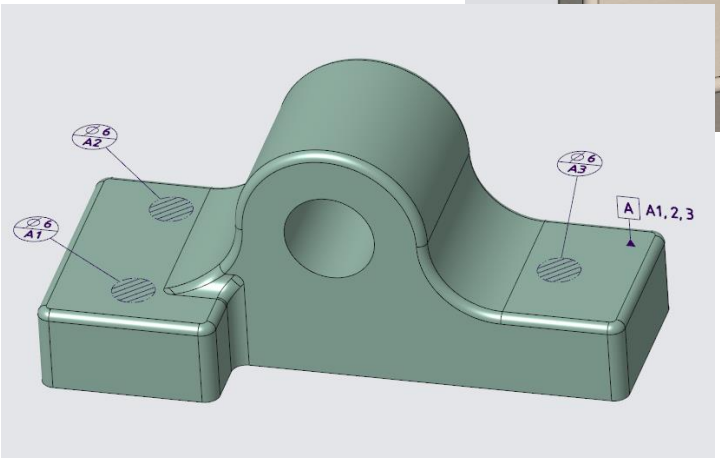

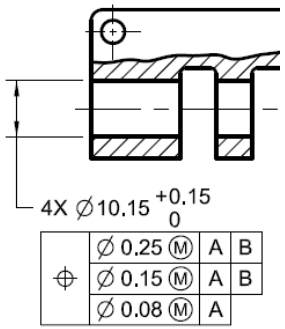

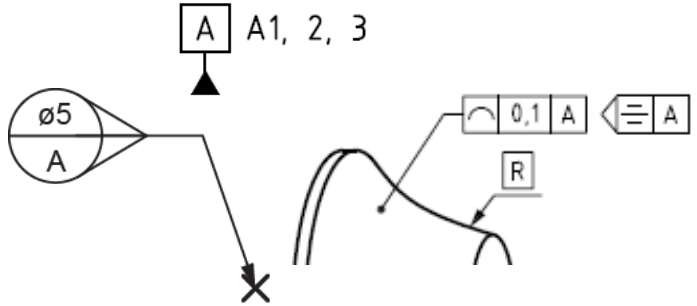

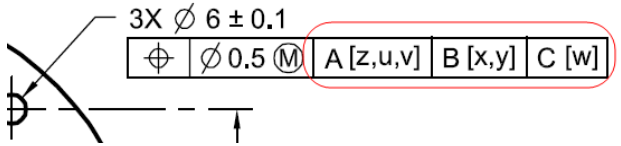

ASME Y14.5-2009
ASME Y14.41-2012

ISO 1101:2012
ISO 5459:2011
+ others…

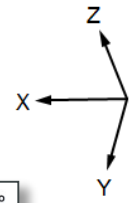

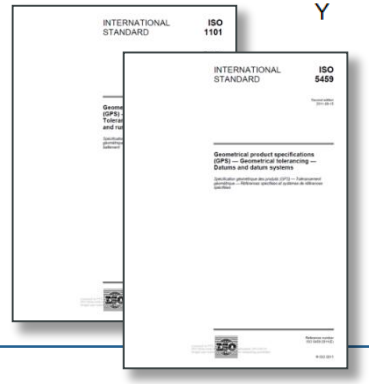

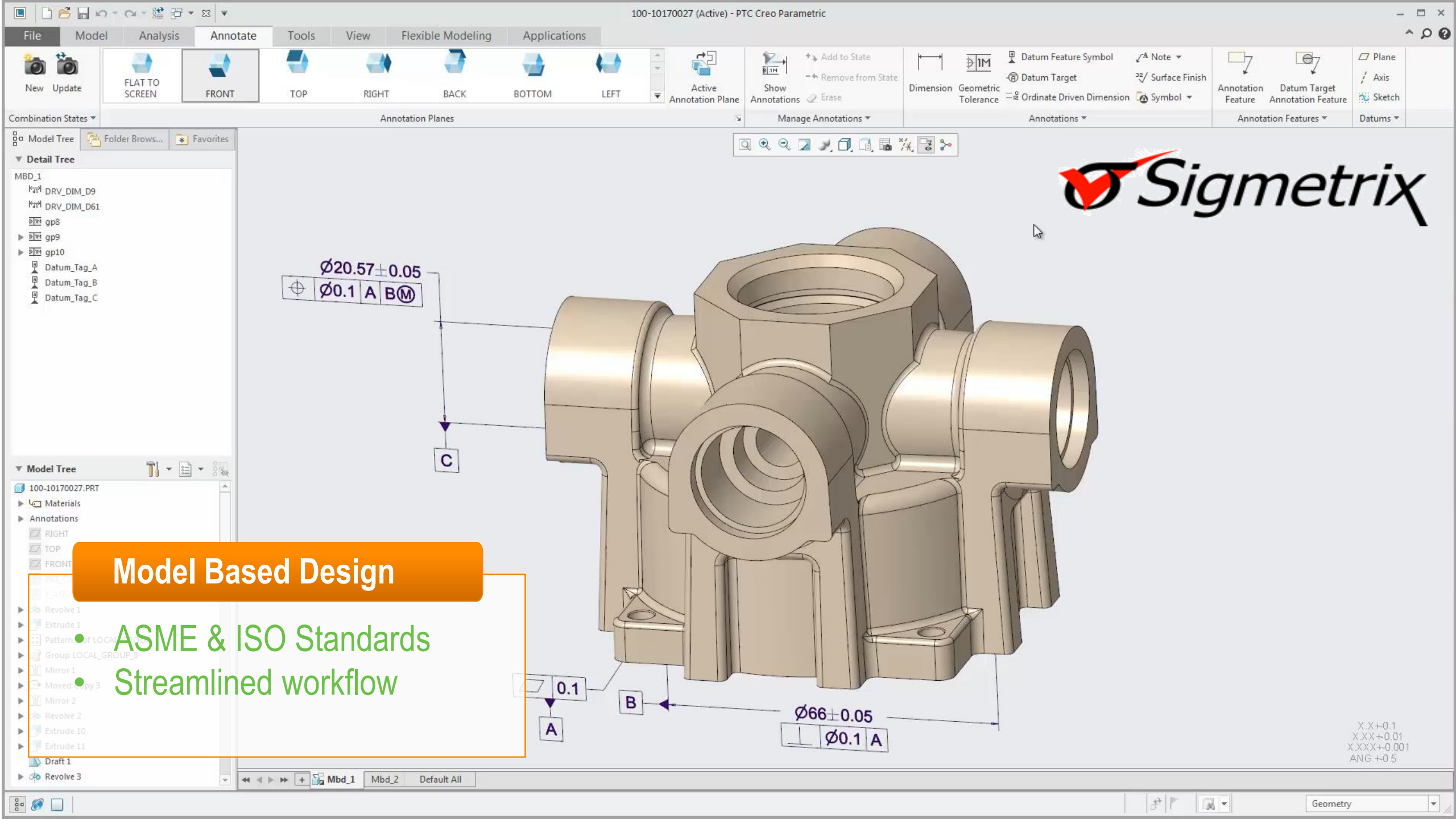

Model Based Design

- ASME & ISO Standards
- Streamlined workflow

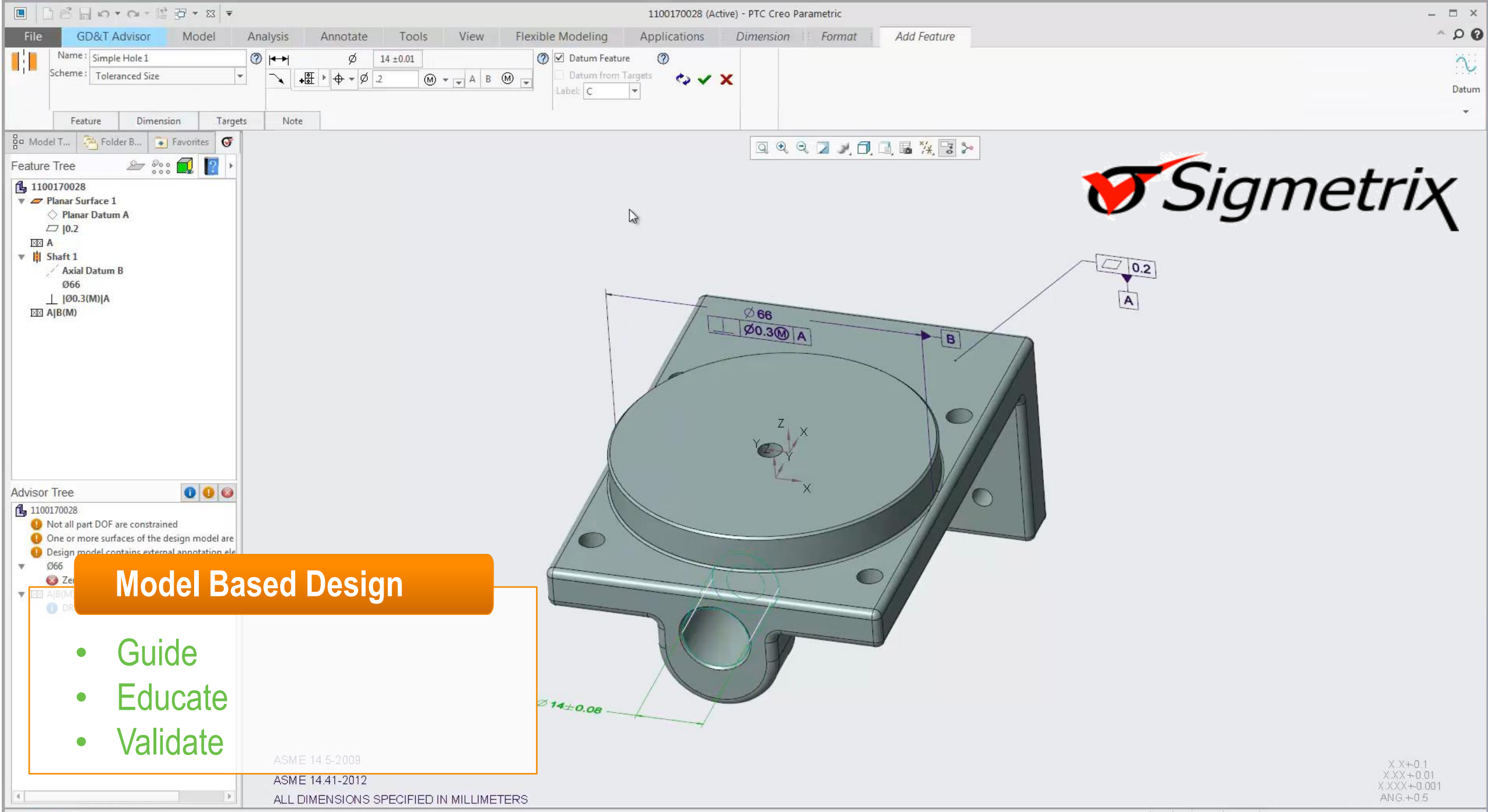

Model Based Design

- Guide
- Educate
- Validate

MODEL BASED ENTERPRISE

Enterprise Consumption

STEP AP 242 & JT
Creo View
Printing

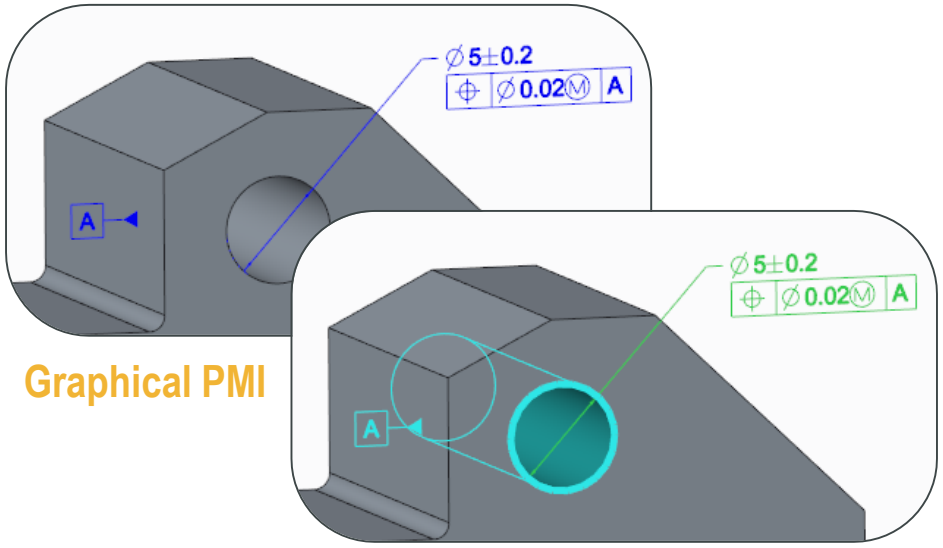

Graphical PMI

Semantic PMI

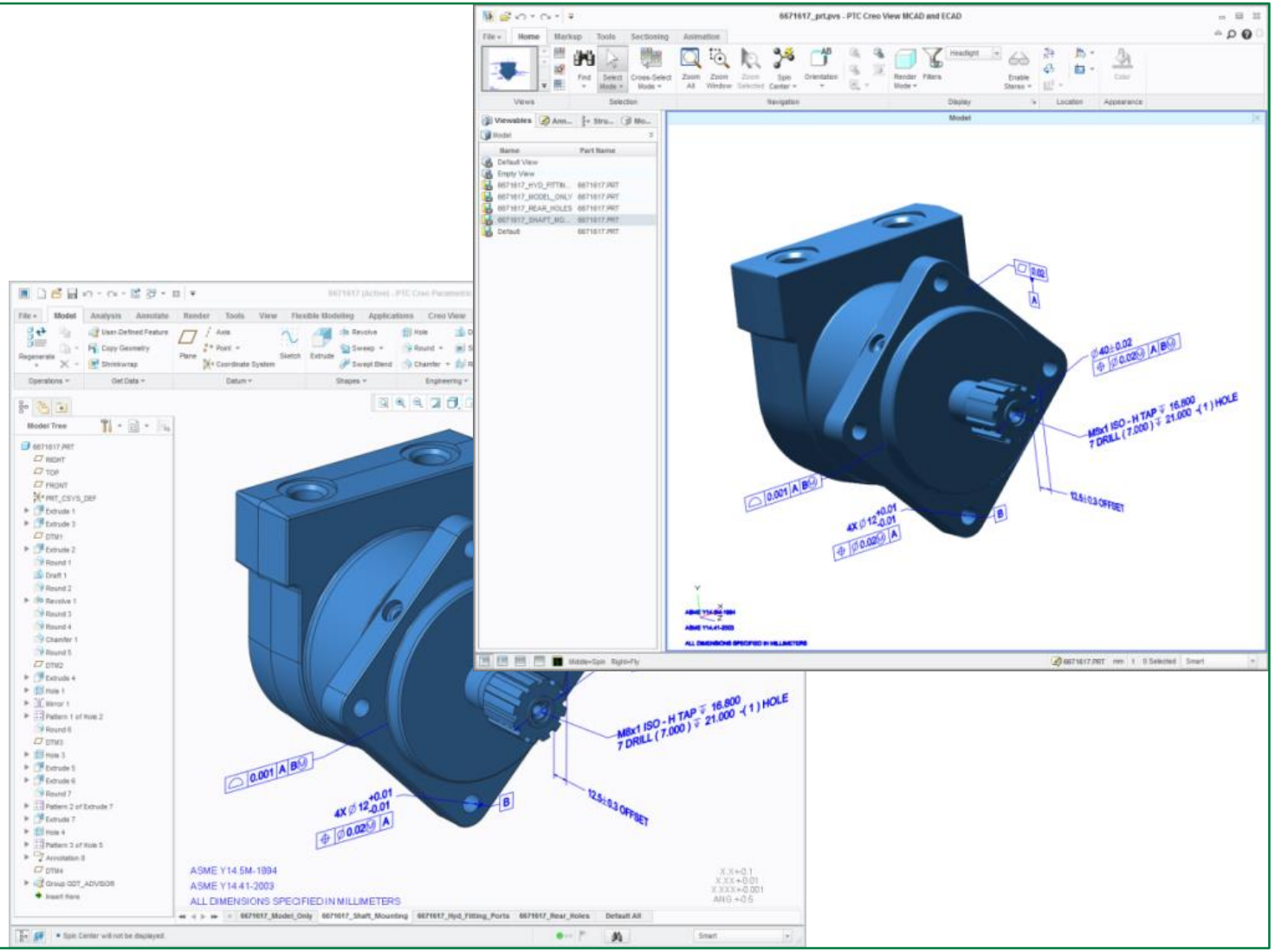

CREO 4.0

- Model Based Enterprise
- Productivity Improvements
- Design for IoT
- Design for Additive Mfg

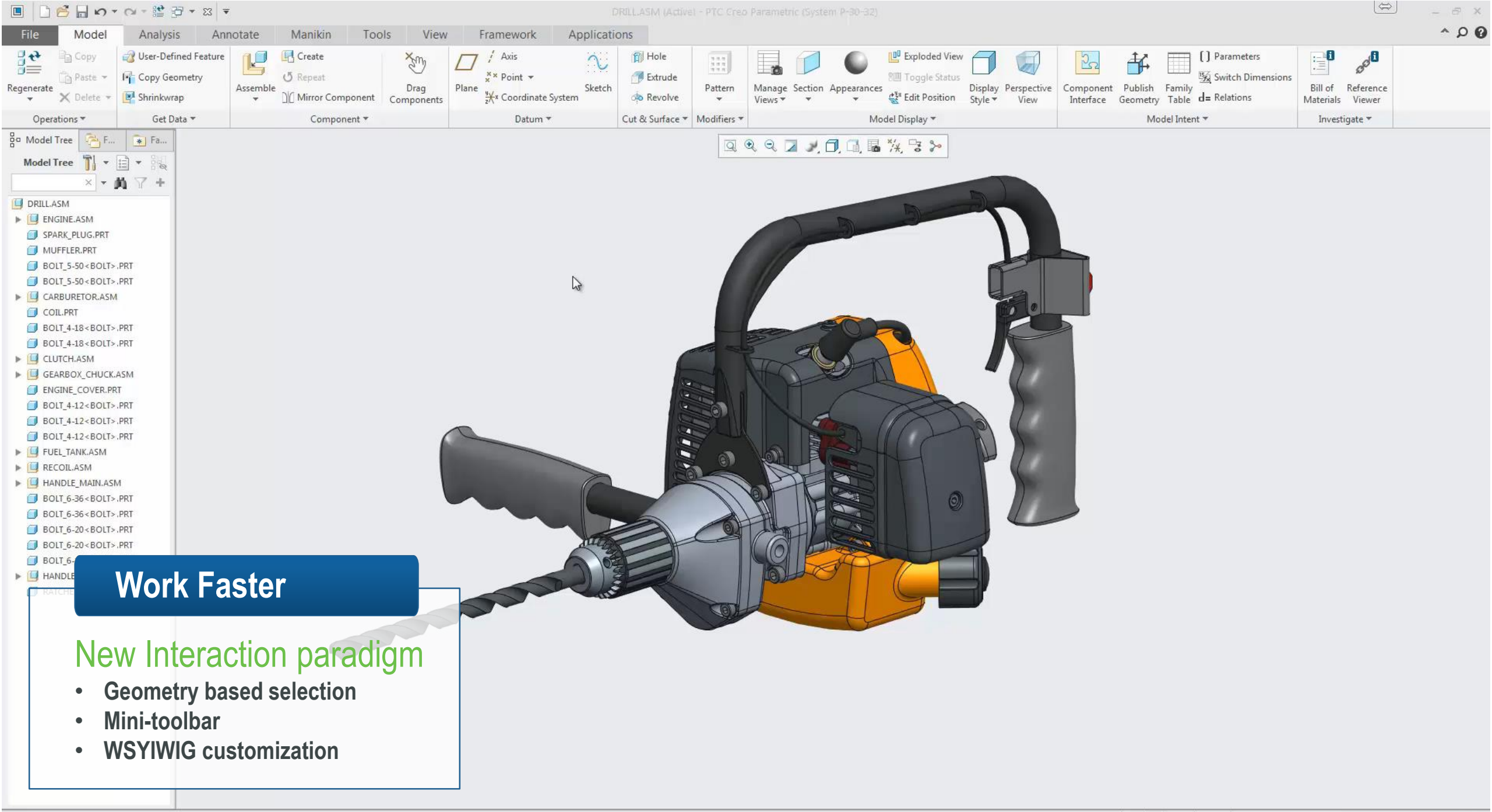

Work Faster

New Interaction paradigm

- Geometry based selection
- Mini-toolbar
- WSYIWIG customization

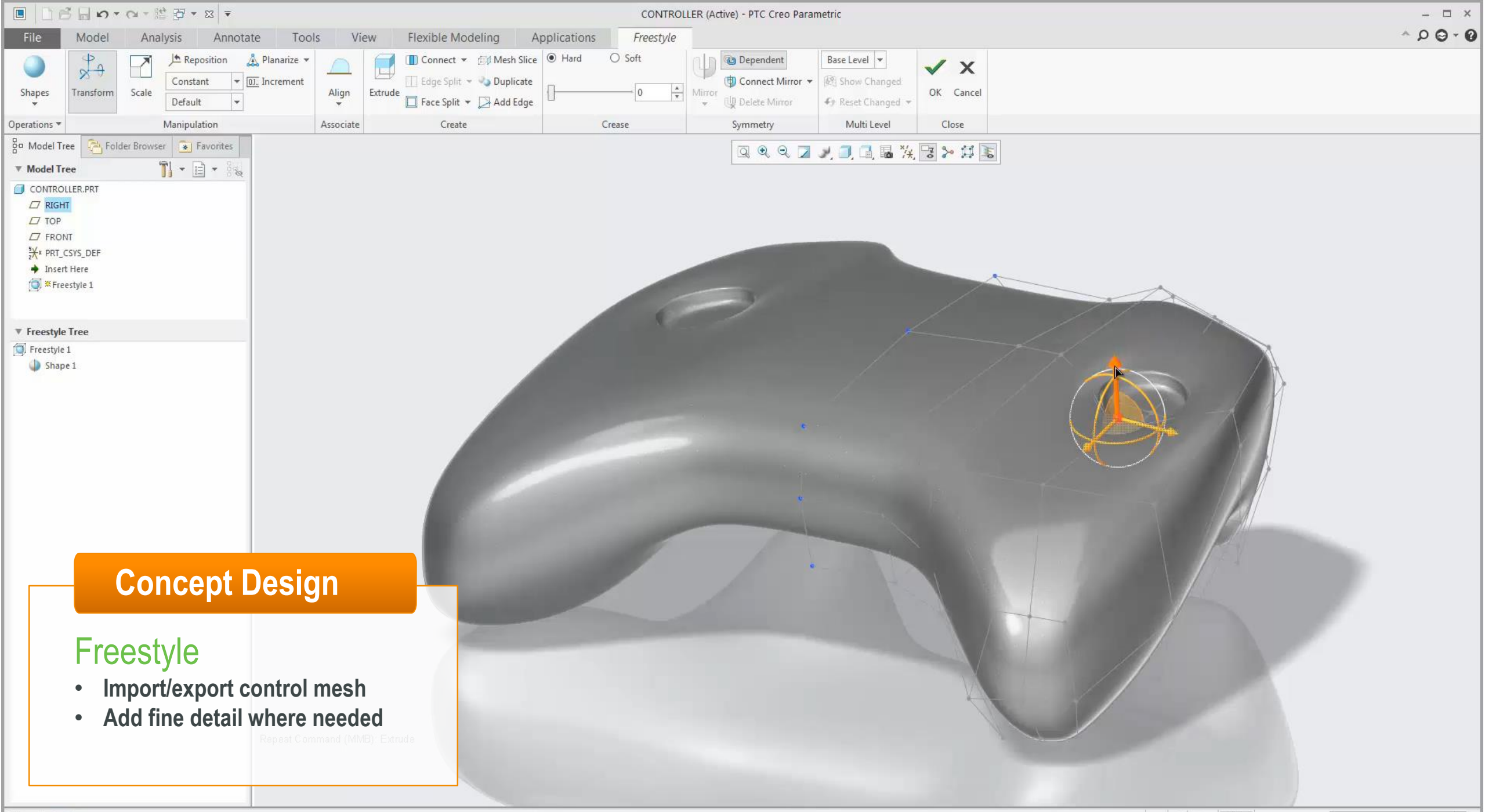

Concept Design

Freestyle

- Import/export control mesh
- Add fine detail where needed

PRODUCTIVITY IMPROVEMENTS

Concept Design

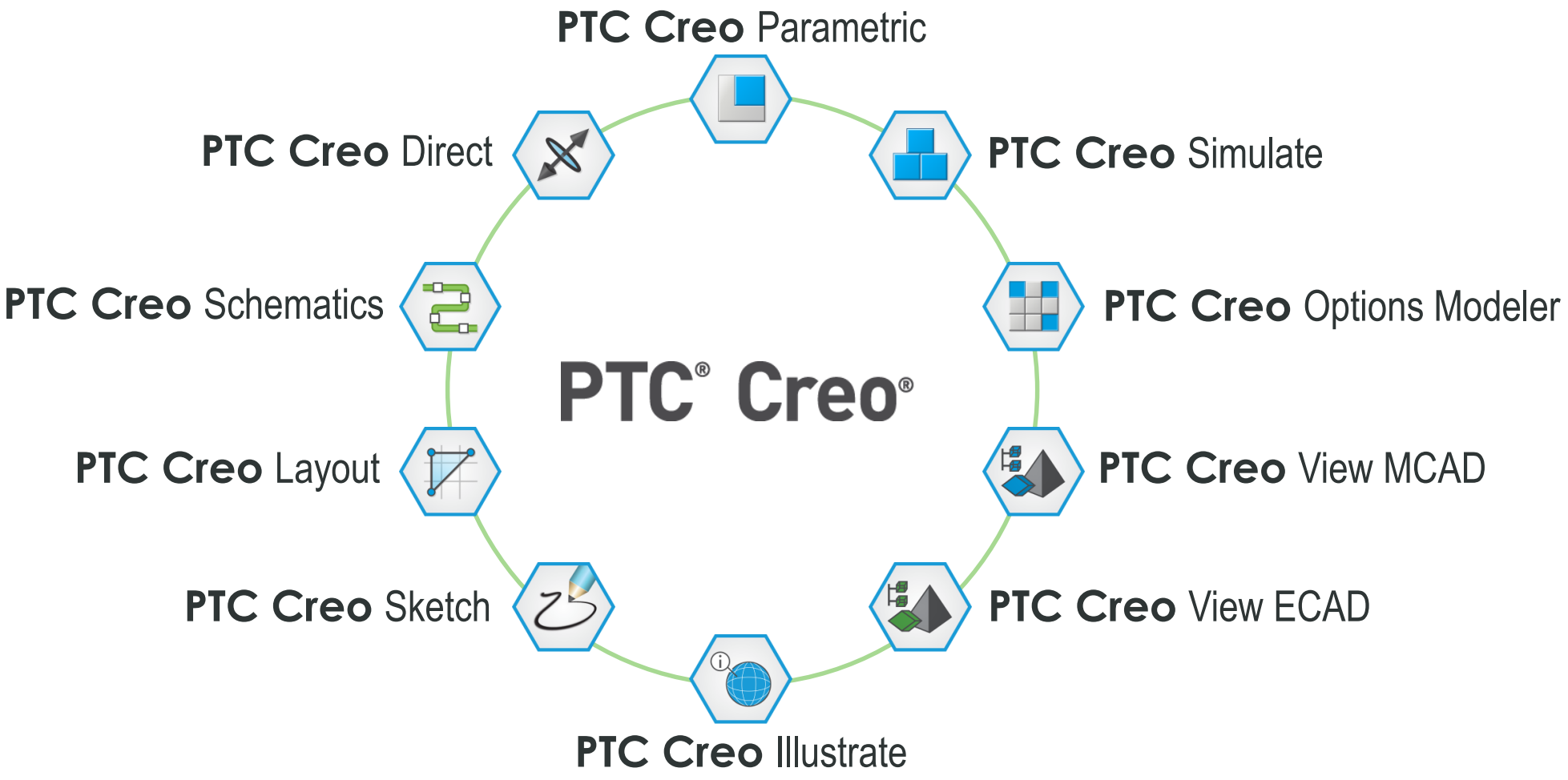

PRODUCTIVITY IMPROVEMENTS

Concept Design

New Advanced Rendering Extension and App

- Powered by Luxion Keyshot
- Fully integrated in PTC Creo
- Real-time Ray-tracing

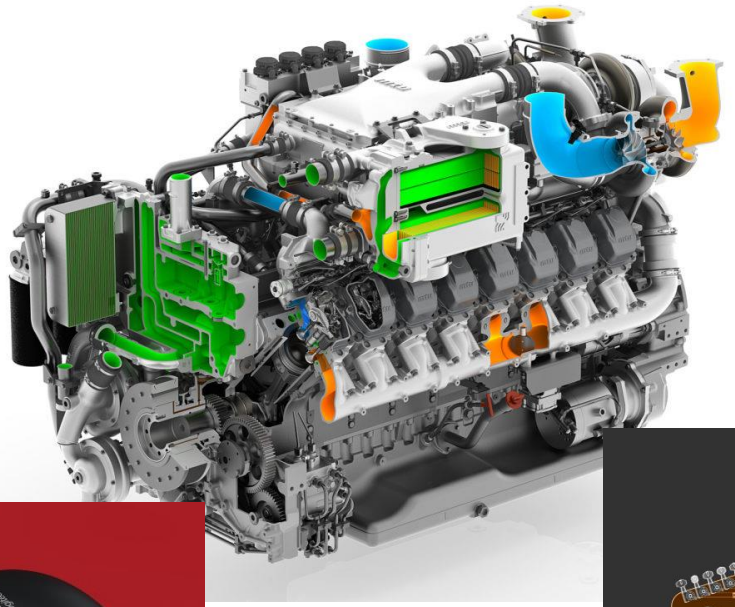

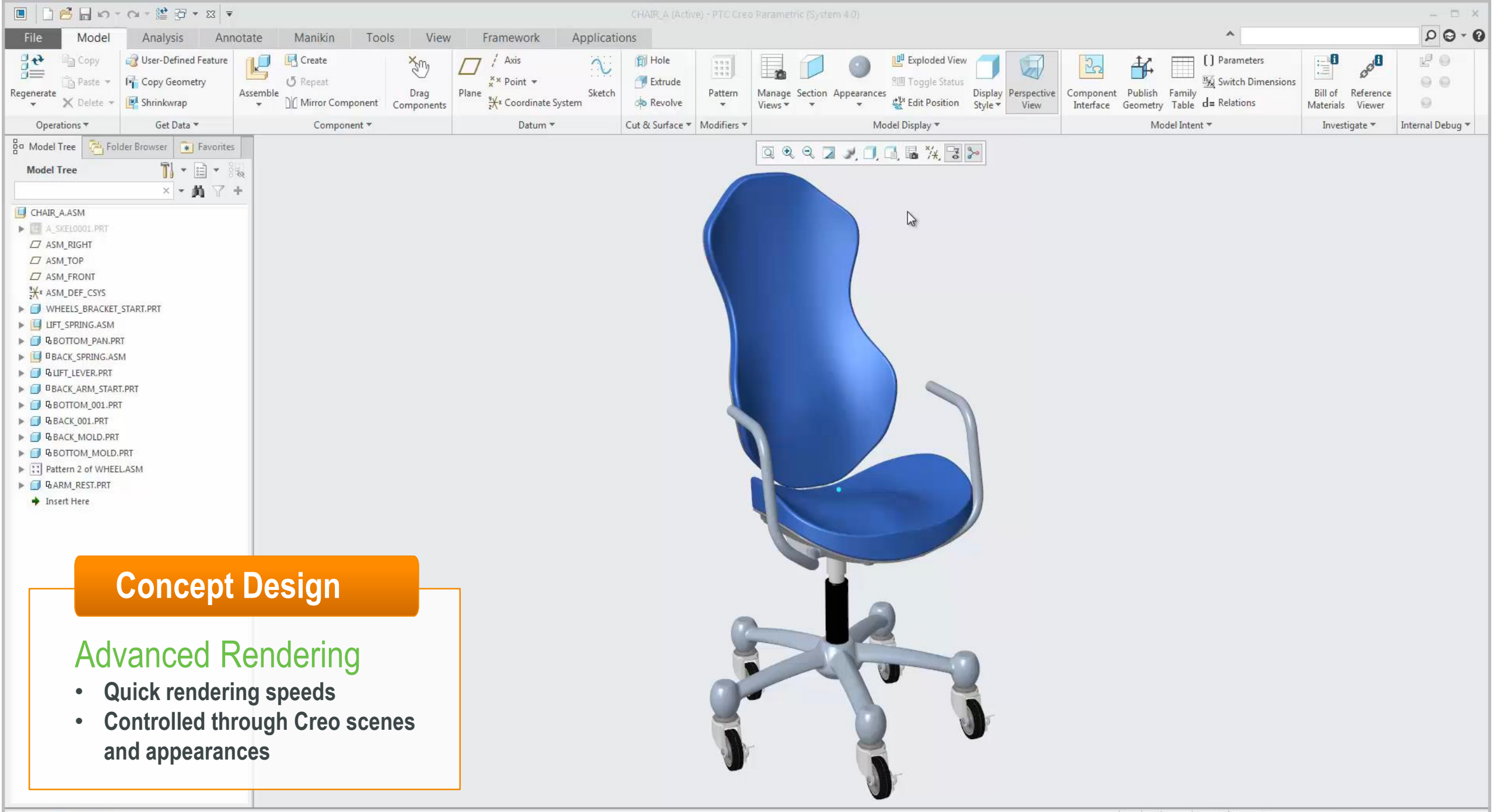

Concept Design

Advanced Rendering

- Quick rendering speeds
- Controlled through Creo scenes and appearances

PRODUCTIVITY IMPROVEMENTS

Concept Design

Creo Direct

- **Frictionless Engineering concept development**

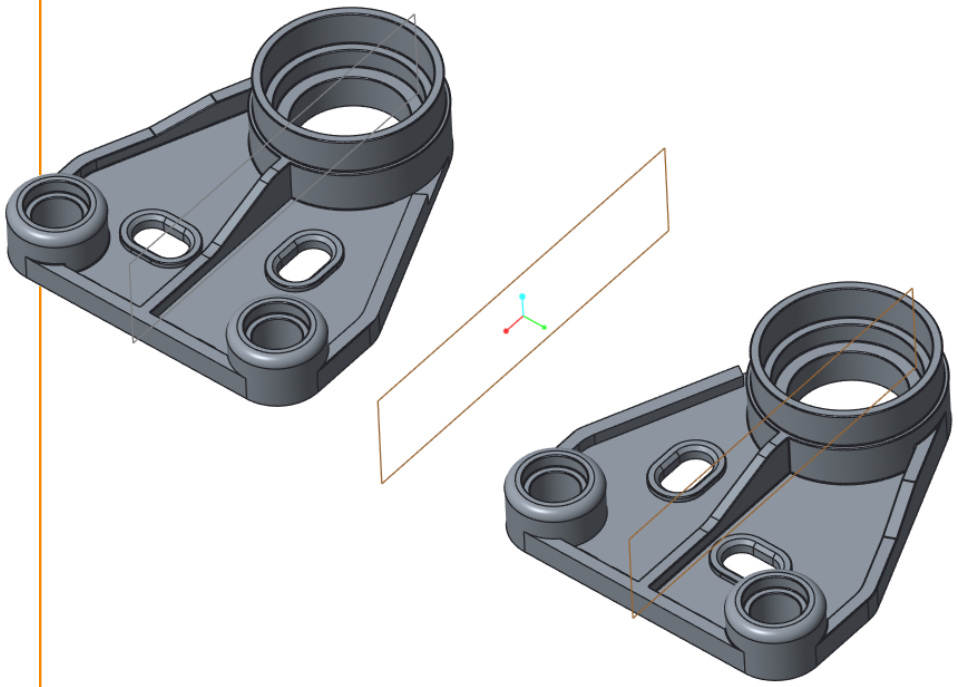

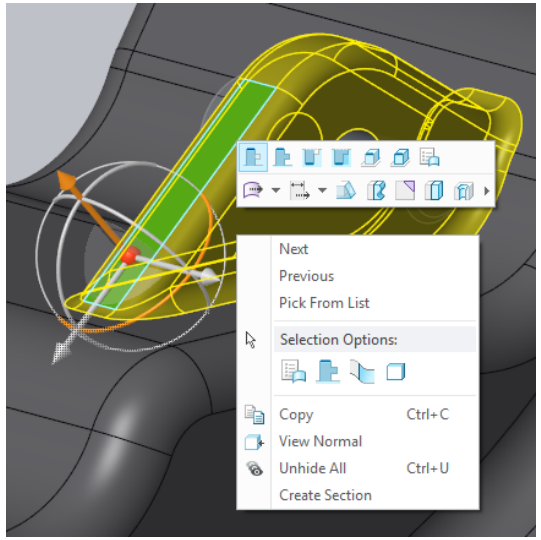

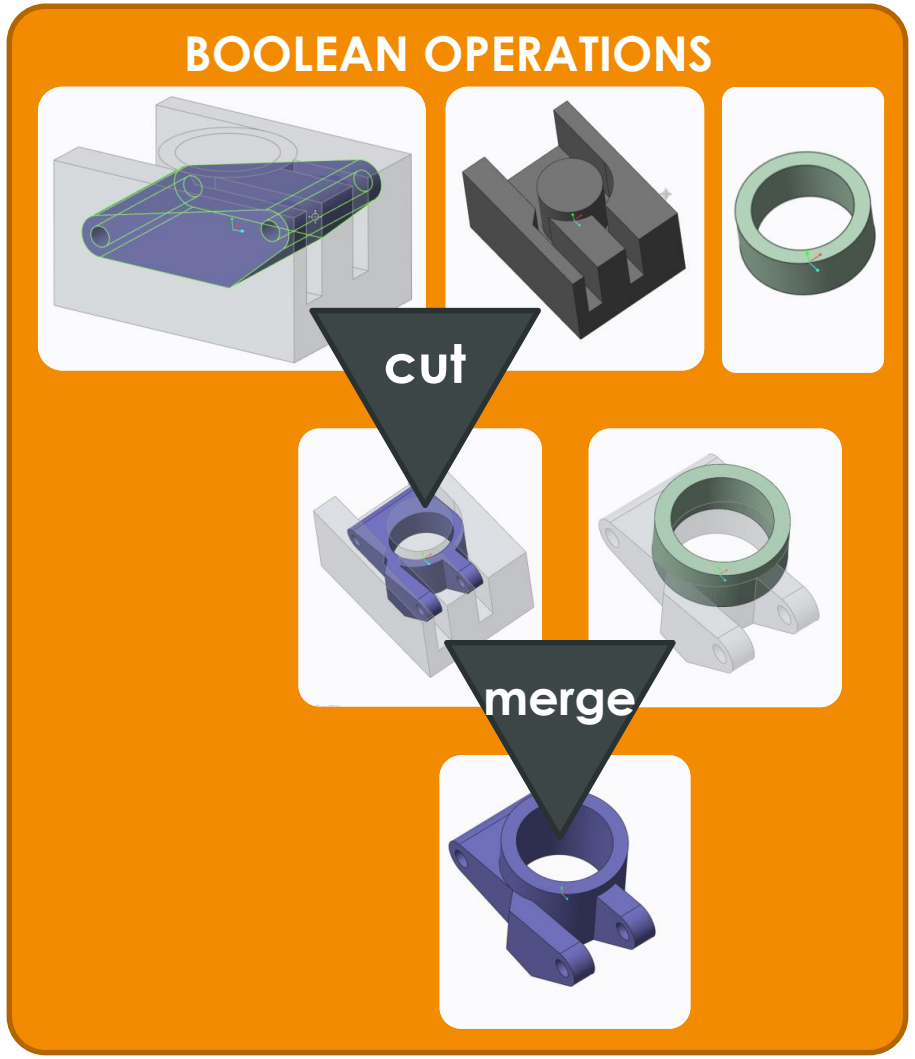

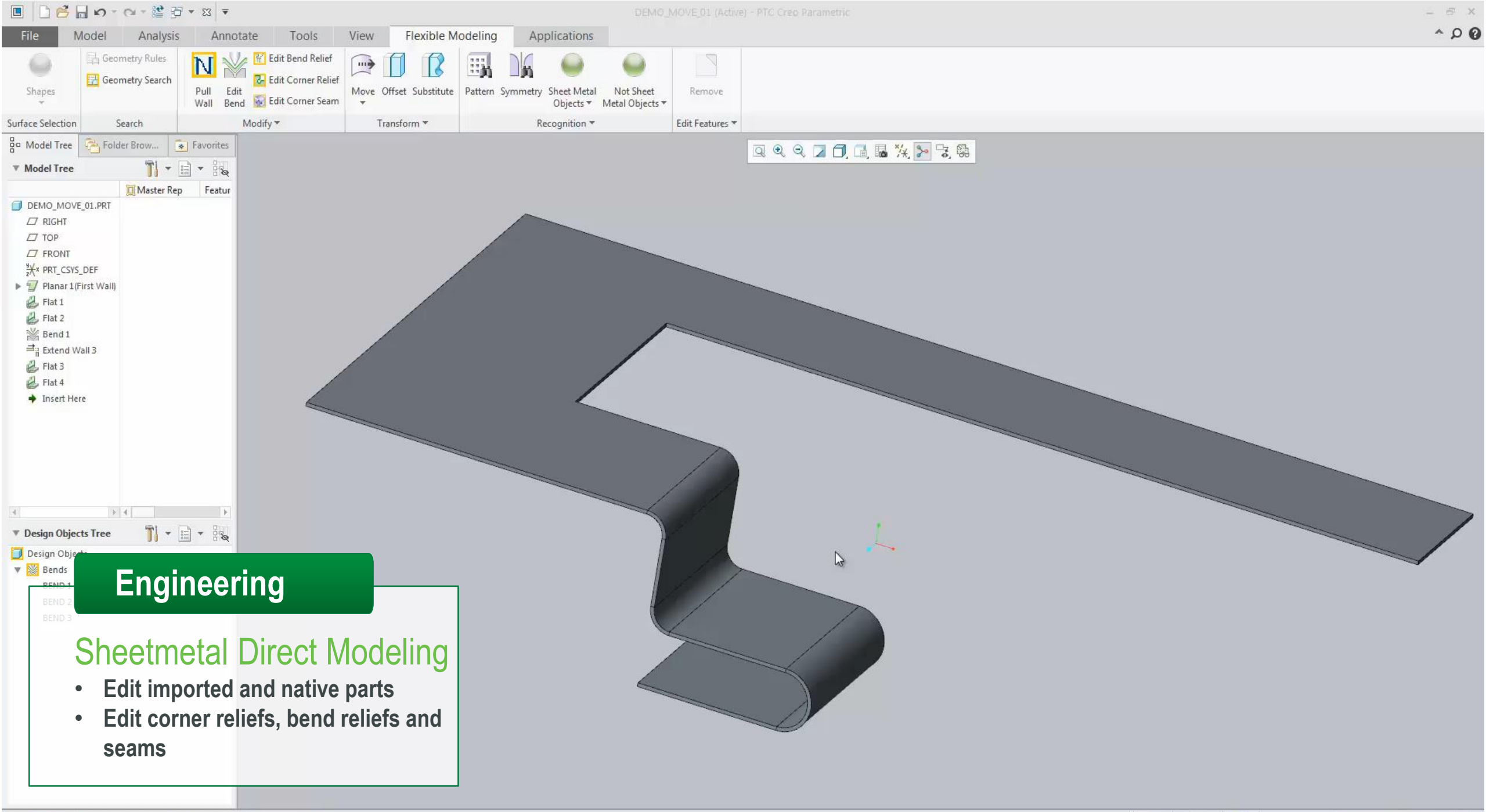

Engineering

Sheetmetal Direct Modeling

- **Edit imported and native parts**
- **Edit corner reliefs, bend reliefs and seams**

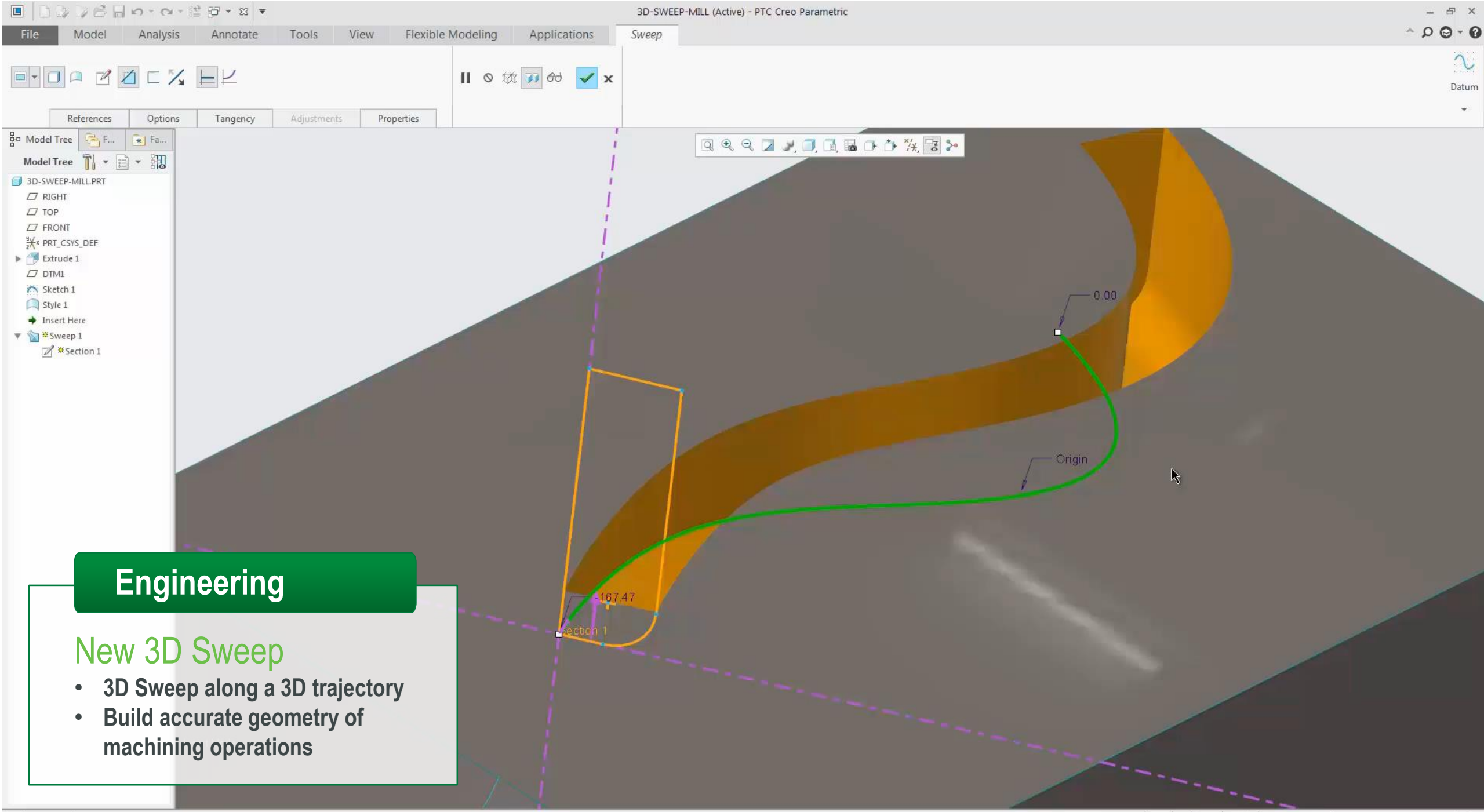

Engineering

New 3D Sweep

- 3D Sweep along a 3D trajectory
- Build accurate geometry of machining operations

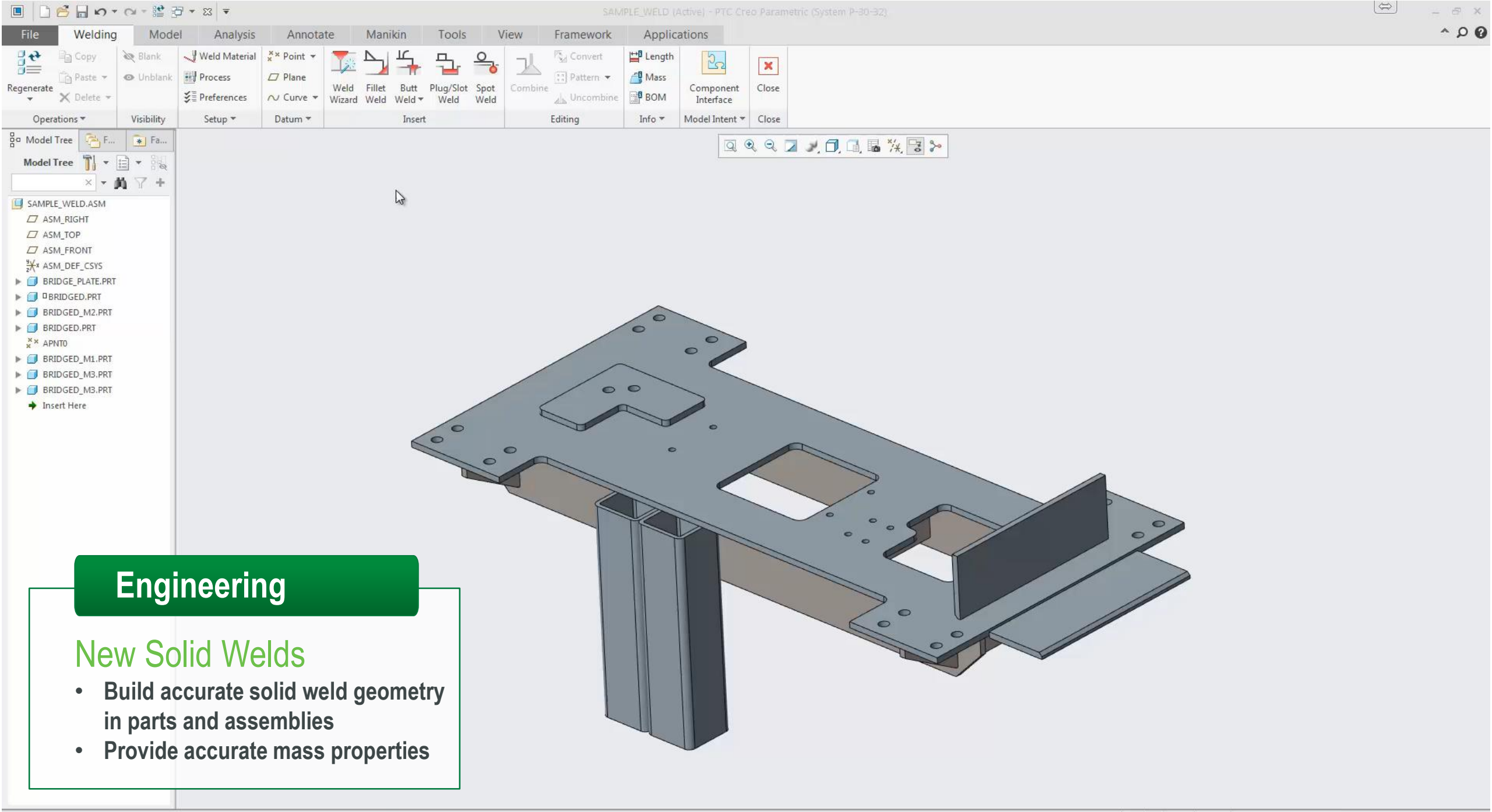

Engineering

New Solid Welds

- Build accurate solid weld geometry in parts and assemblies
- Provide accurate mass properties

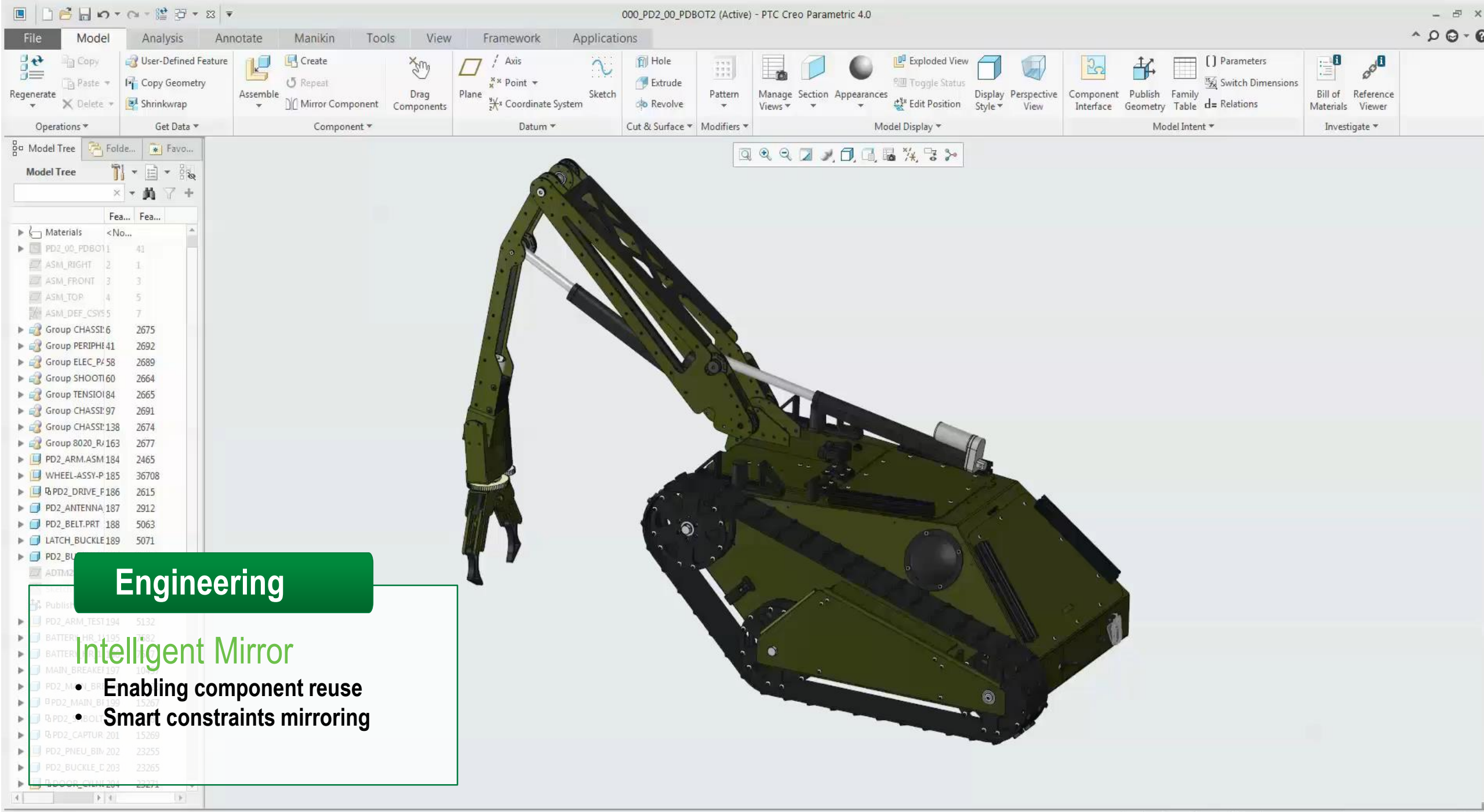

Engineering

Intelligent Mirror

- Enabling component reuse
- Smart constraints mirroring

PRODUCTIVITY IMPROVEMENTS

Engineering

Creo Simulate

- User guidance
- New standard material files
- Geometry simplification

GRANTA
MATERIAL INTELLIGENCE

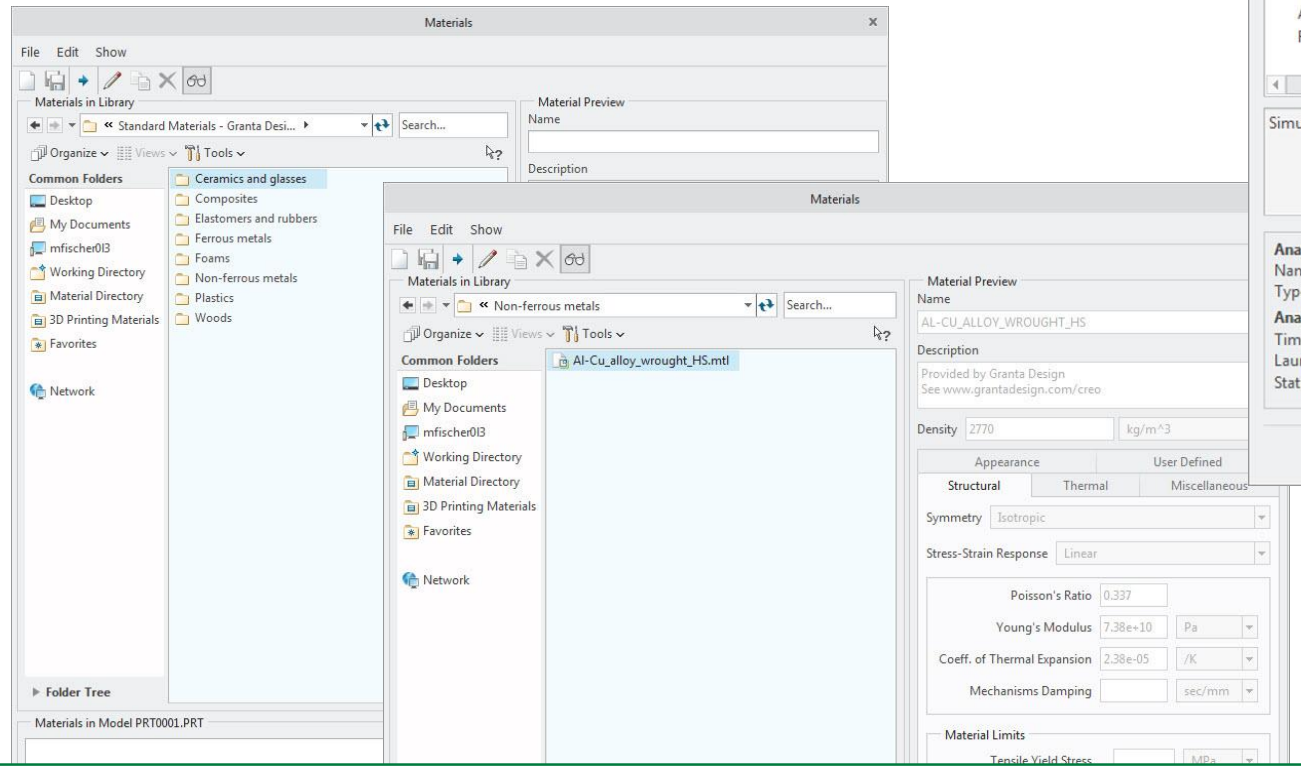

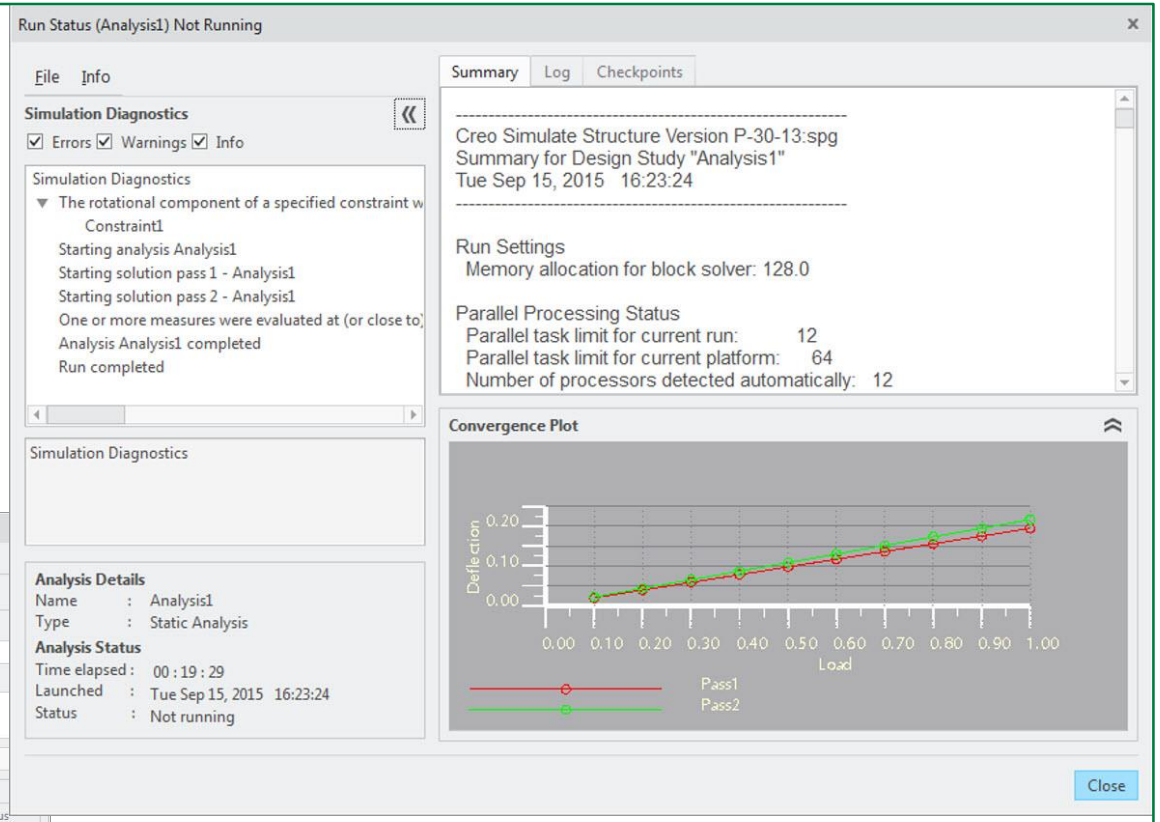

PRODUCTIVITY IMPROVEMENTS

Manufacturing

Mold Design

- **Faster and more intuitive mold splitting**

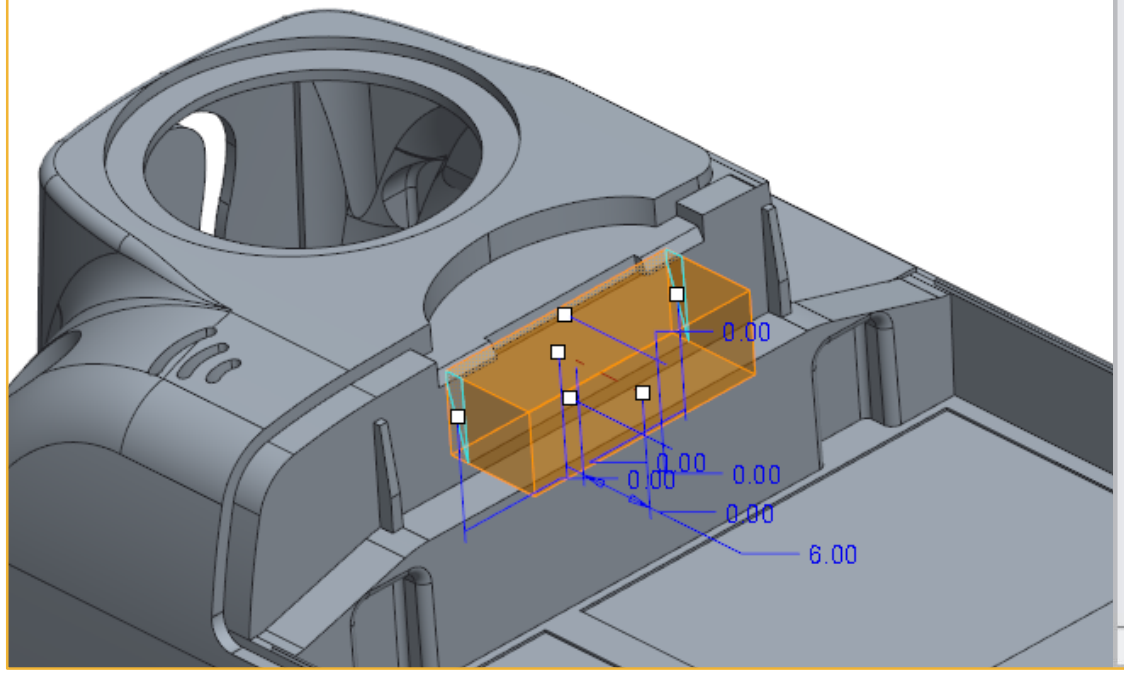

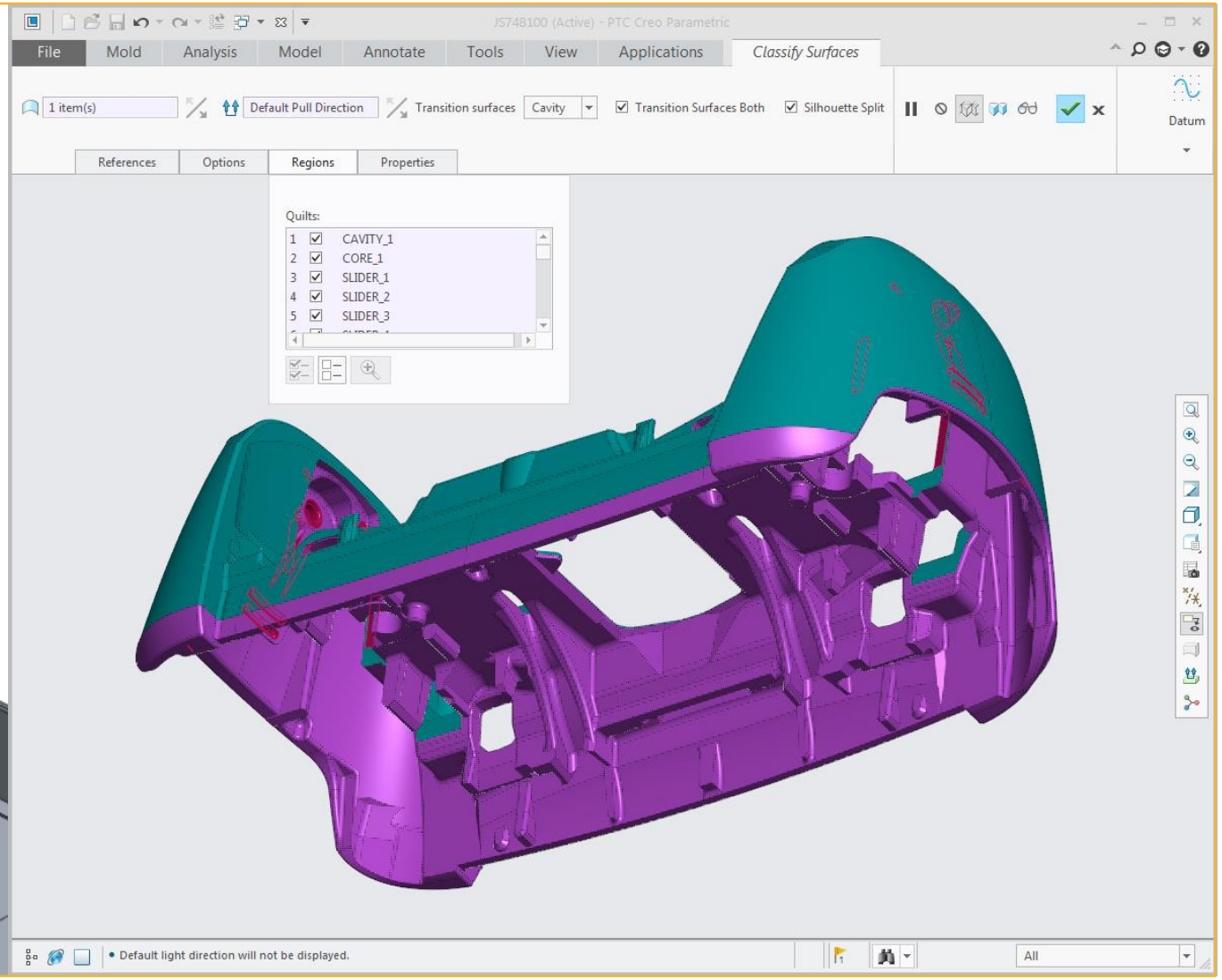

PRODUCTIVITY IMPROVEMENTS

Manufacturing

NC Enhancements

- **Integrated Material Removal simulation**

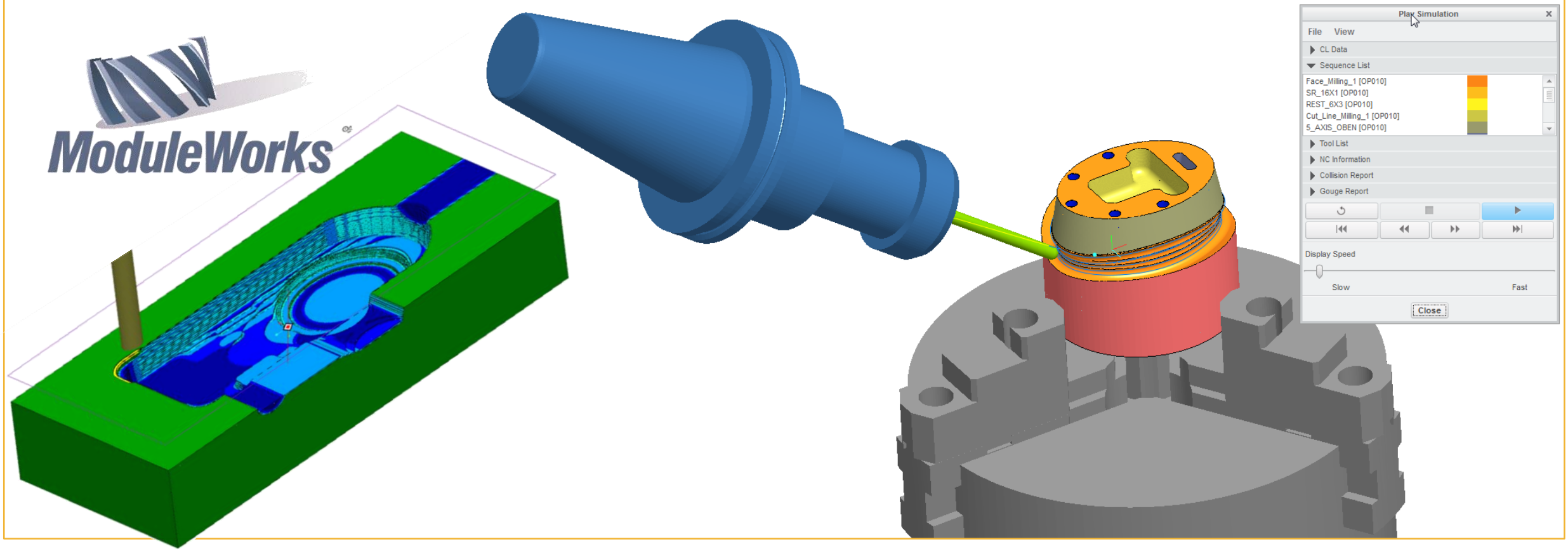

CREO 4.0

- Model Based Enterprise
- Productivity Improvements
- Design for IoT
- Design for Additive Mfg

A MISSING CONNECTION FOR ENGINEERING…

Digital Prototype | Digital Twin | Physical Product

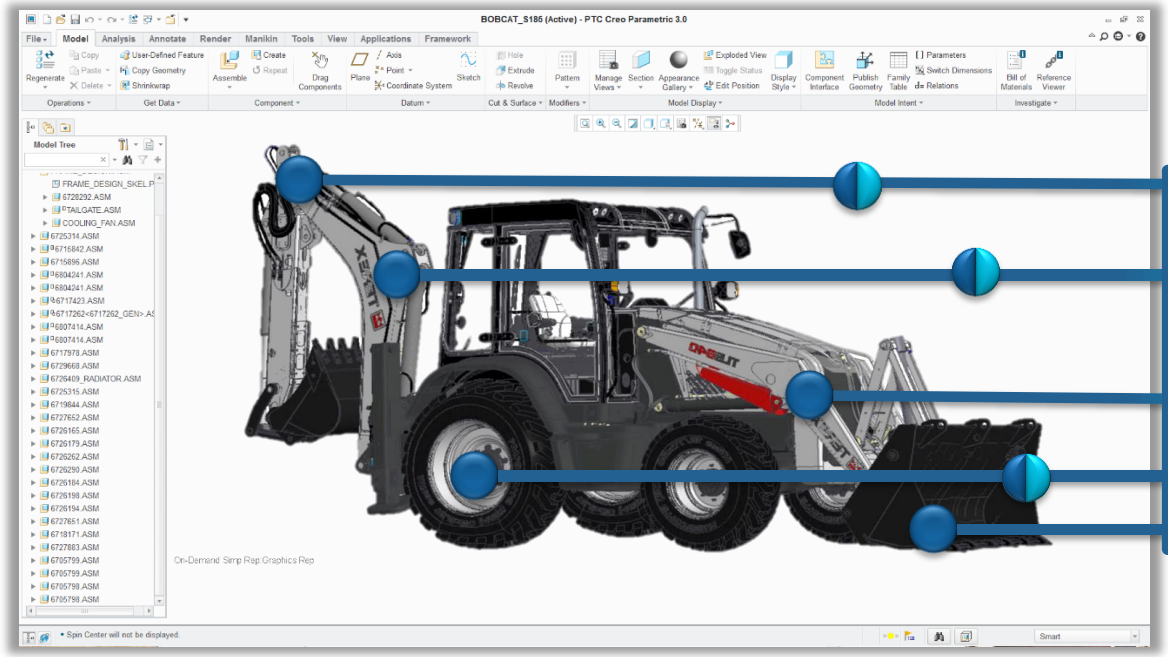

Digital Twin: A digital representation of a unique occurrence of a physical product, used to gain greater insight into that product's state, performance and behavior.

MISSION/PROTOTYPE/CONTINUOUS TEST

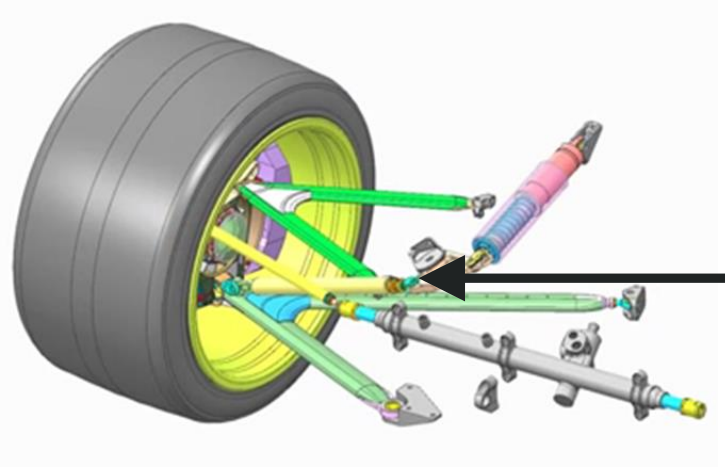

REAL-WORLD DATA DRIVEN DESIGNS

Digital Prototype

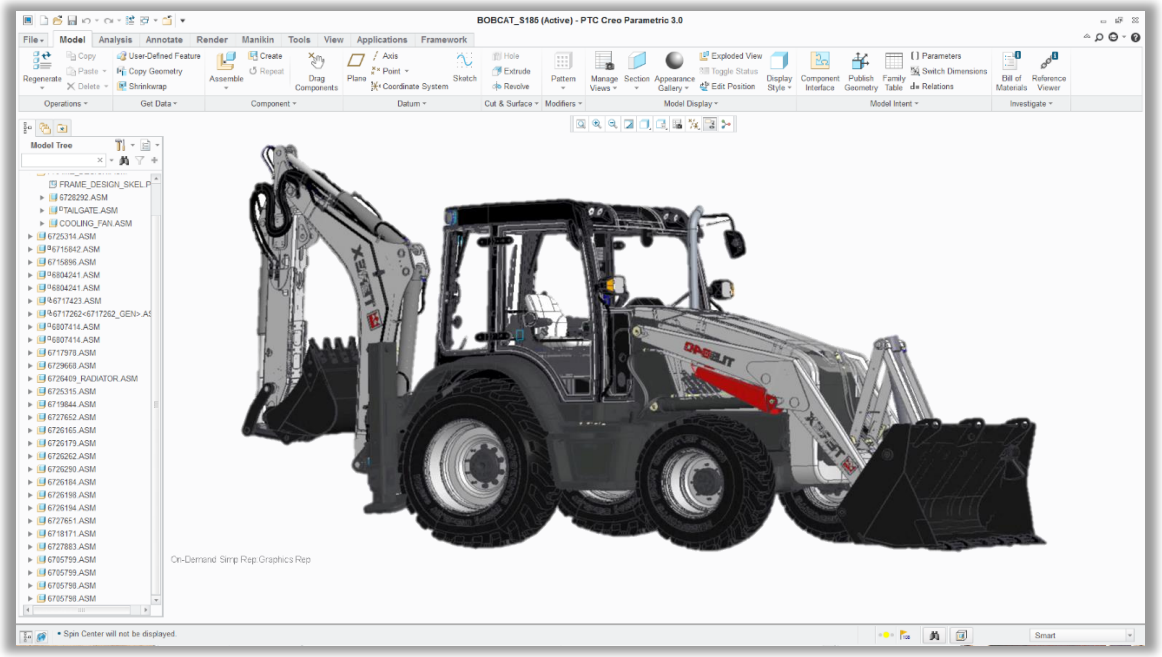

Product Population

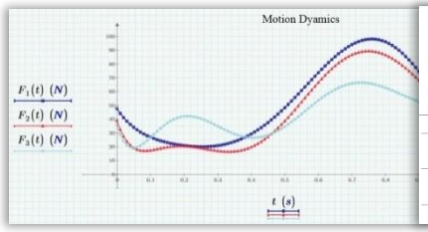

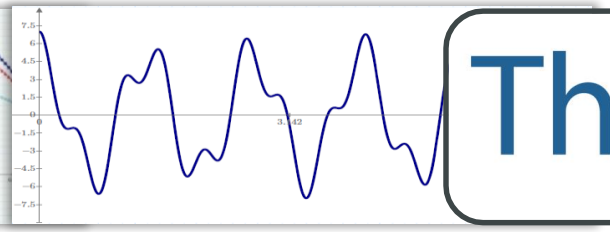

ThingWorx™
A PTC® Business

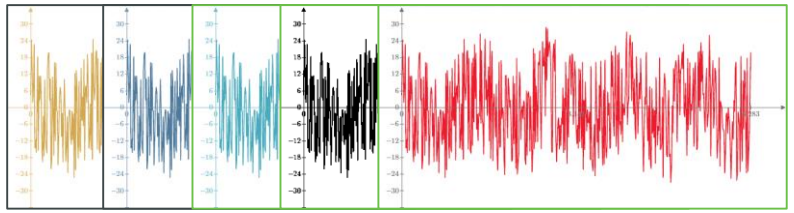

ASSUMPTION

REALITY

EXPANDING ENGINEERING AWARENESS

ptc

Digital Prototype

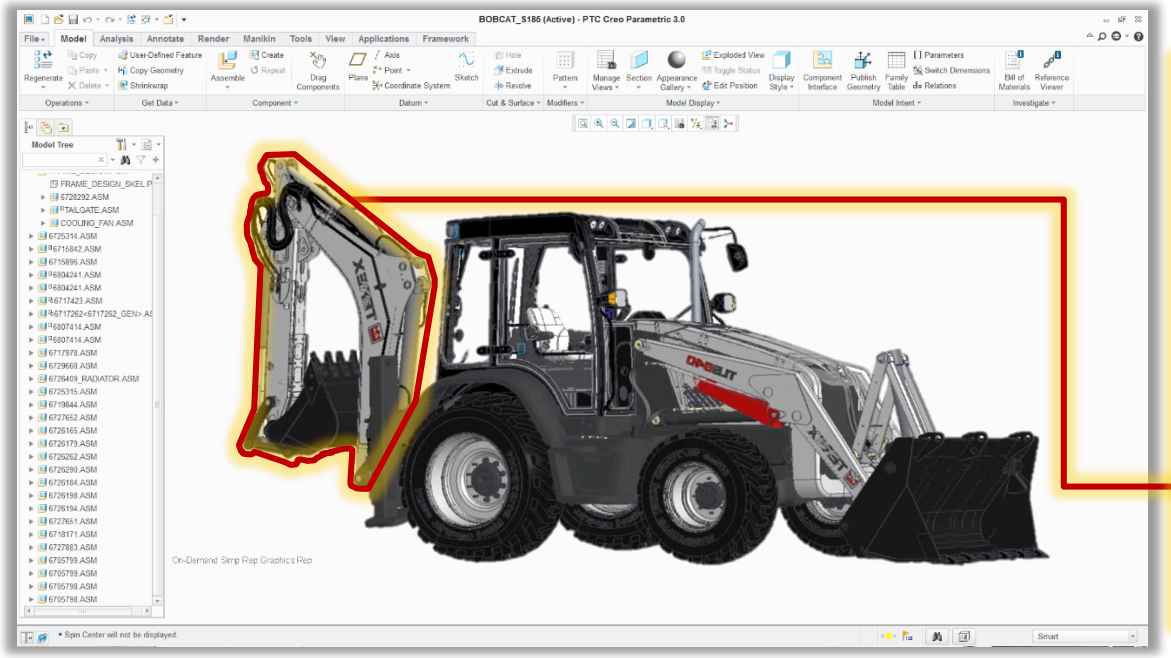

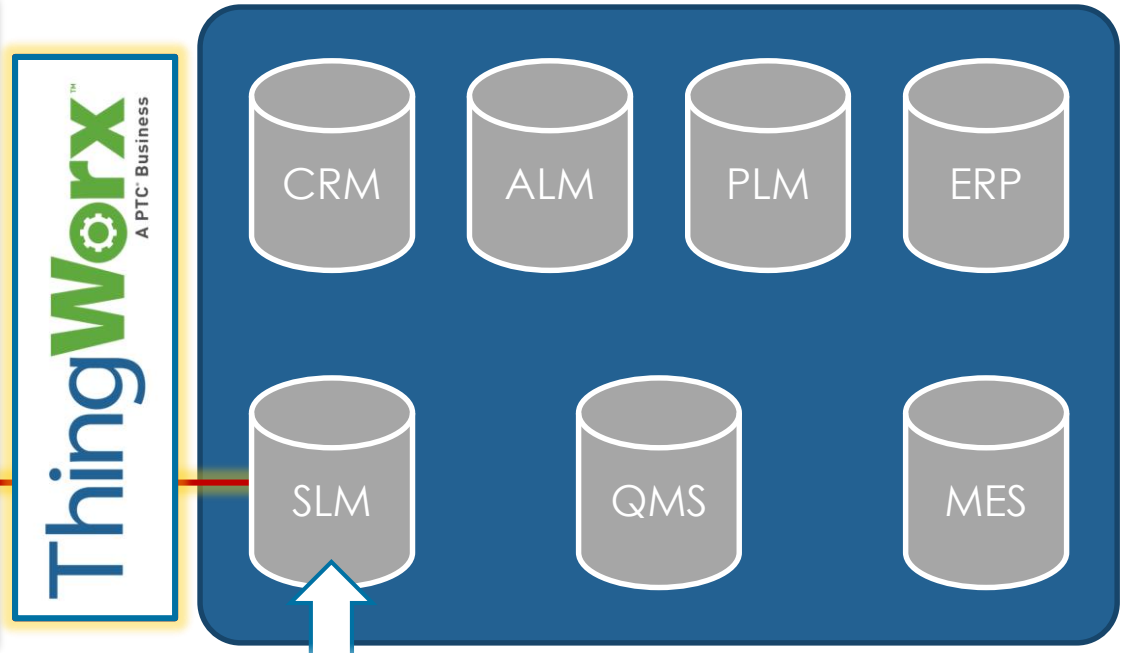

Marketing/Sales

Engineering

Management

Service/Support

Purchasing

Quality

Manufacturing

EXPANDING ENGINEERING AWARENESS

ptc

Digital Prototype

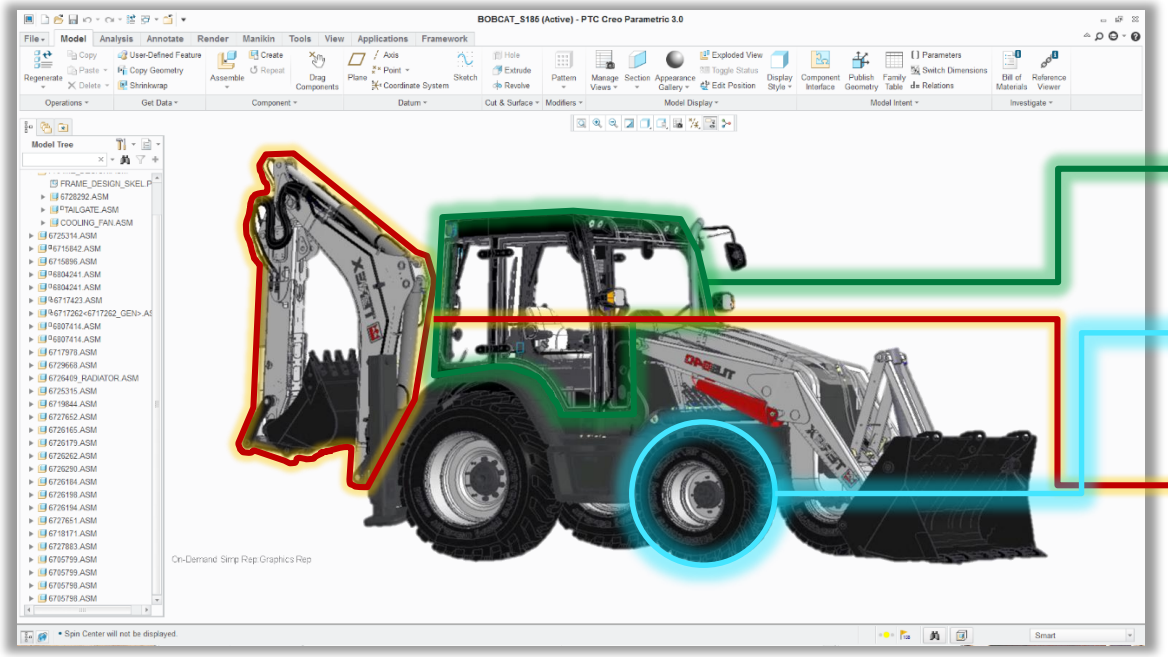

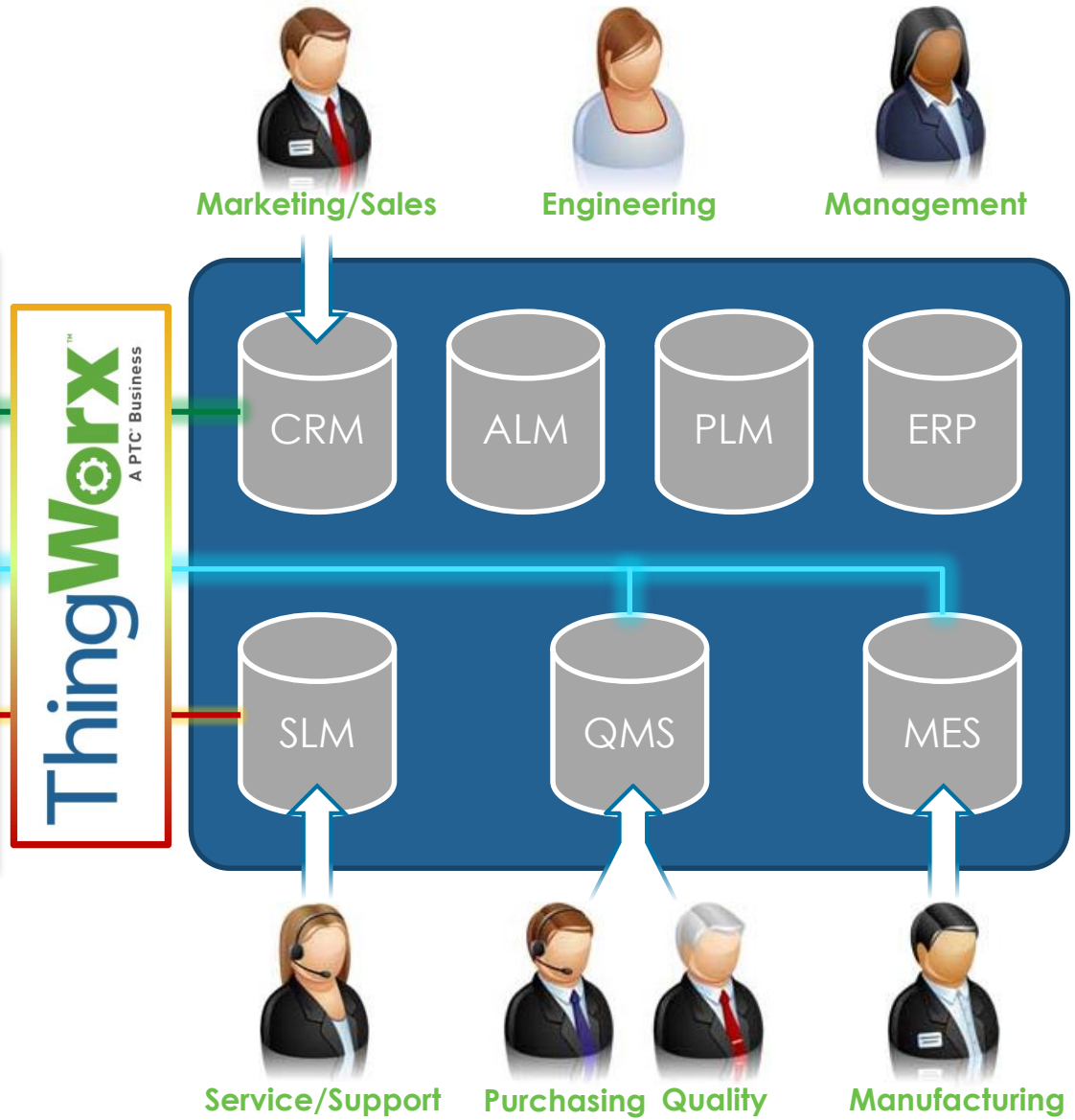

PTC CREO INITIATIVES IN DESIGN, ENGINEERING, DIGITAL TWIN

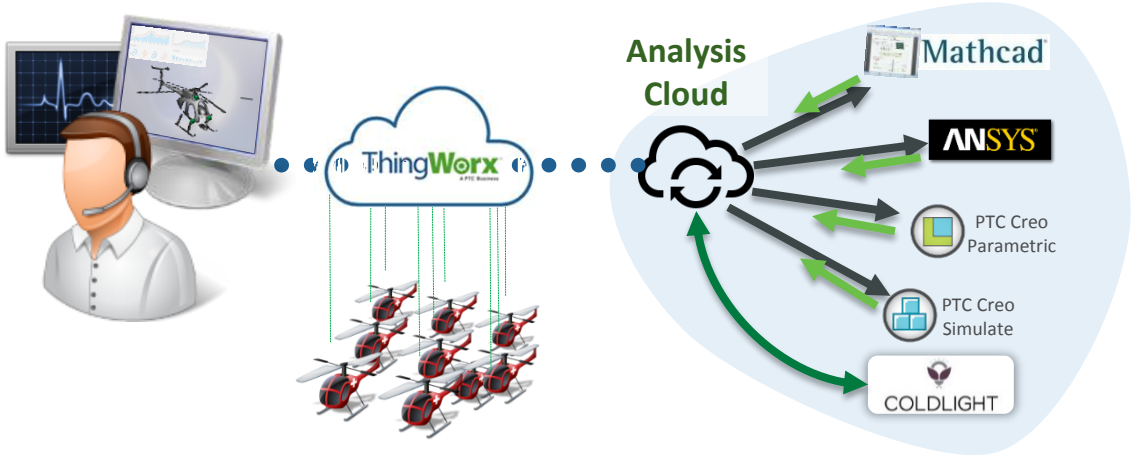

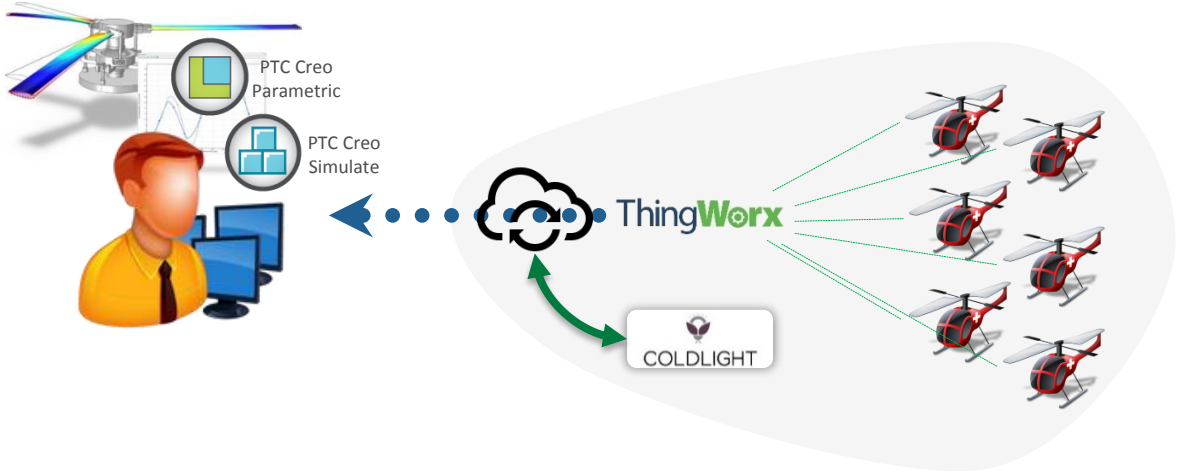

- Analysis Cloud and Services
  - **non-CAD users** access Analysis data
  - **Automated** diagnostics

- PTC Creo Insights App/Extension
  - **Creo users** access sensor data
  - Product design optimization
  - Enhance design iterations

CREO 4.0

- Model Based Enterprise
- Productivity Improvements
- Design for IoT
- Design for Additive Mfg

DESIGN FOR ADDITIVE MFG

3D Printing Process

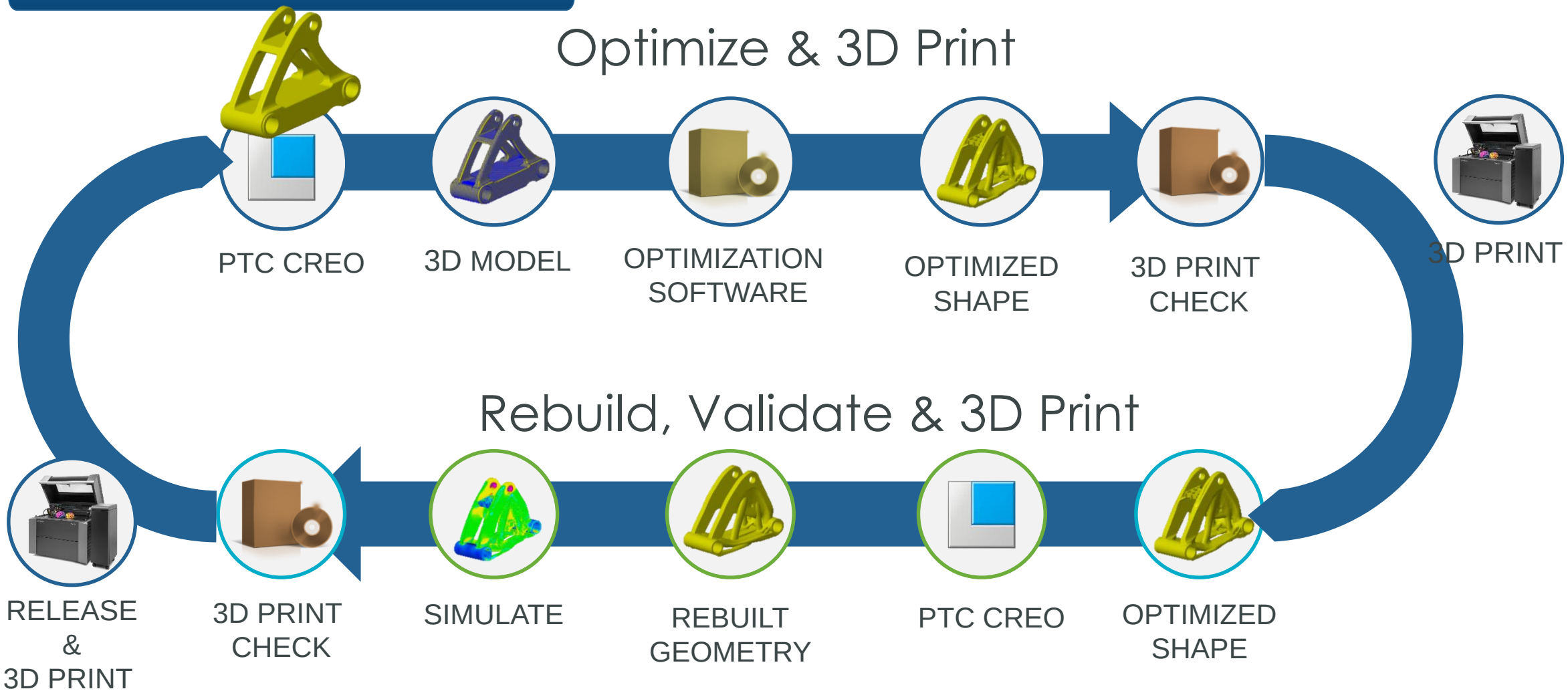

DESIGN FOR ADDITIVE MFG

3D Printing Process

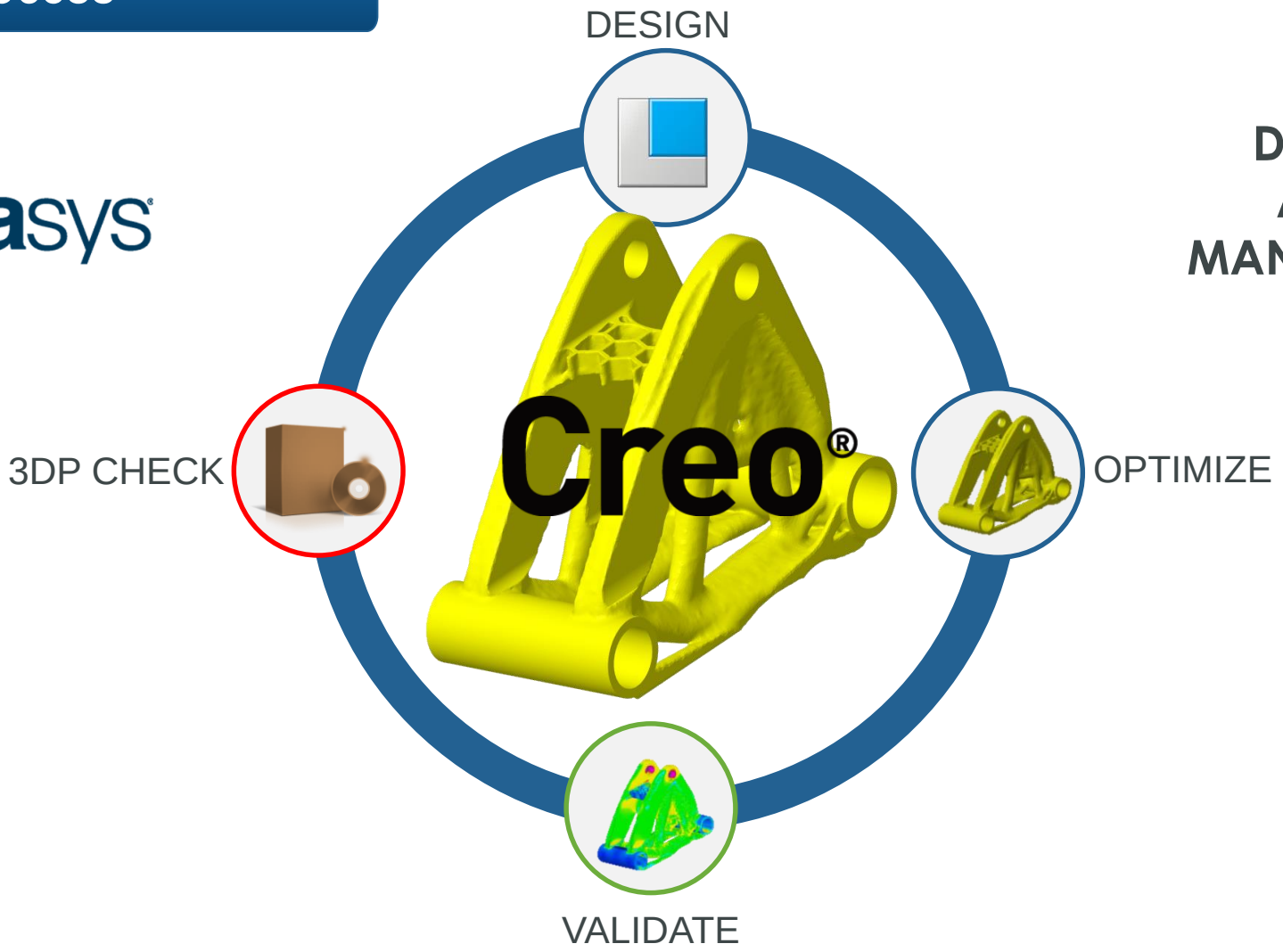

DESIGN FOR ADDITITVE MANUFACTURING

DESIGN FOR ADDITIVE MFG

2.5D Lattice Structures

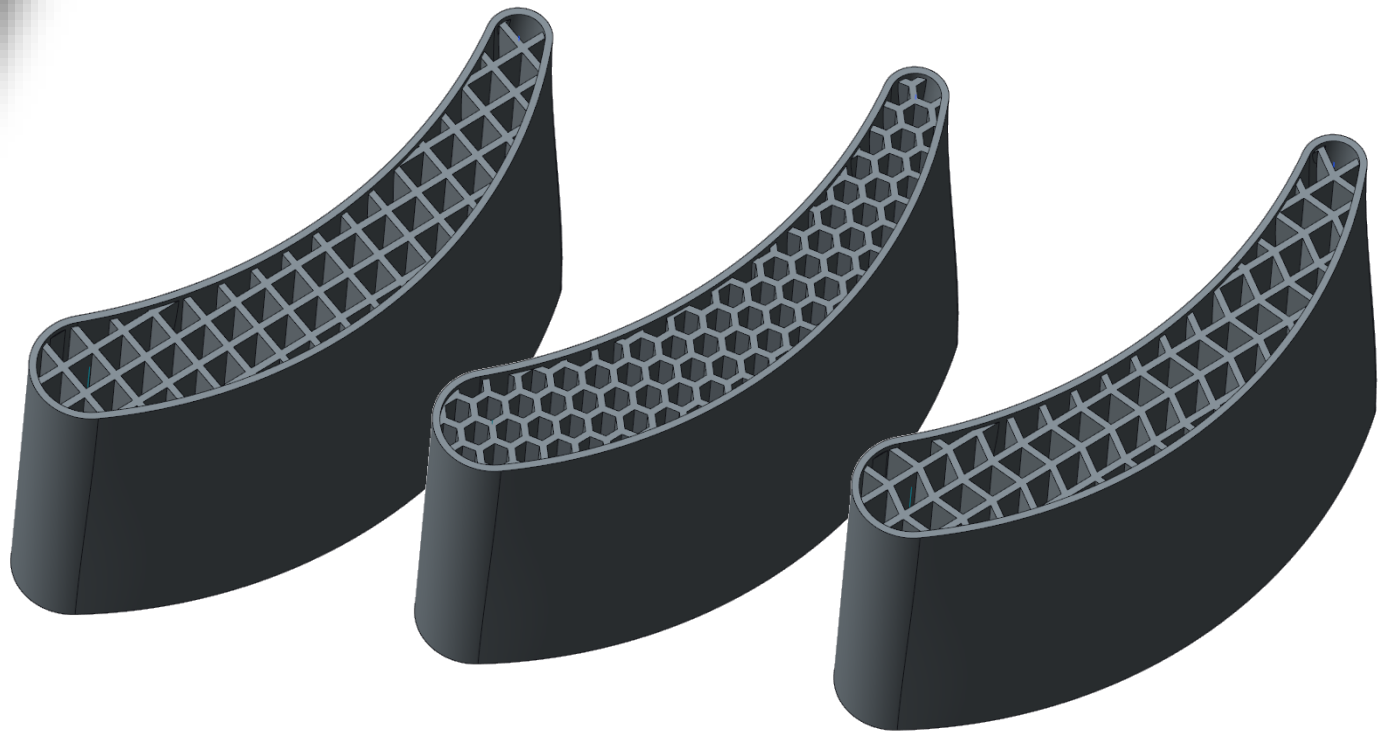

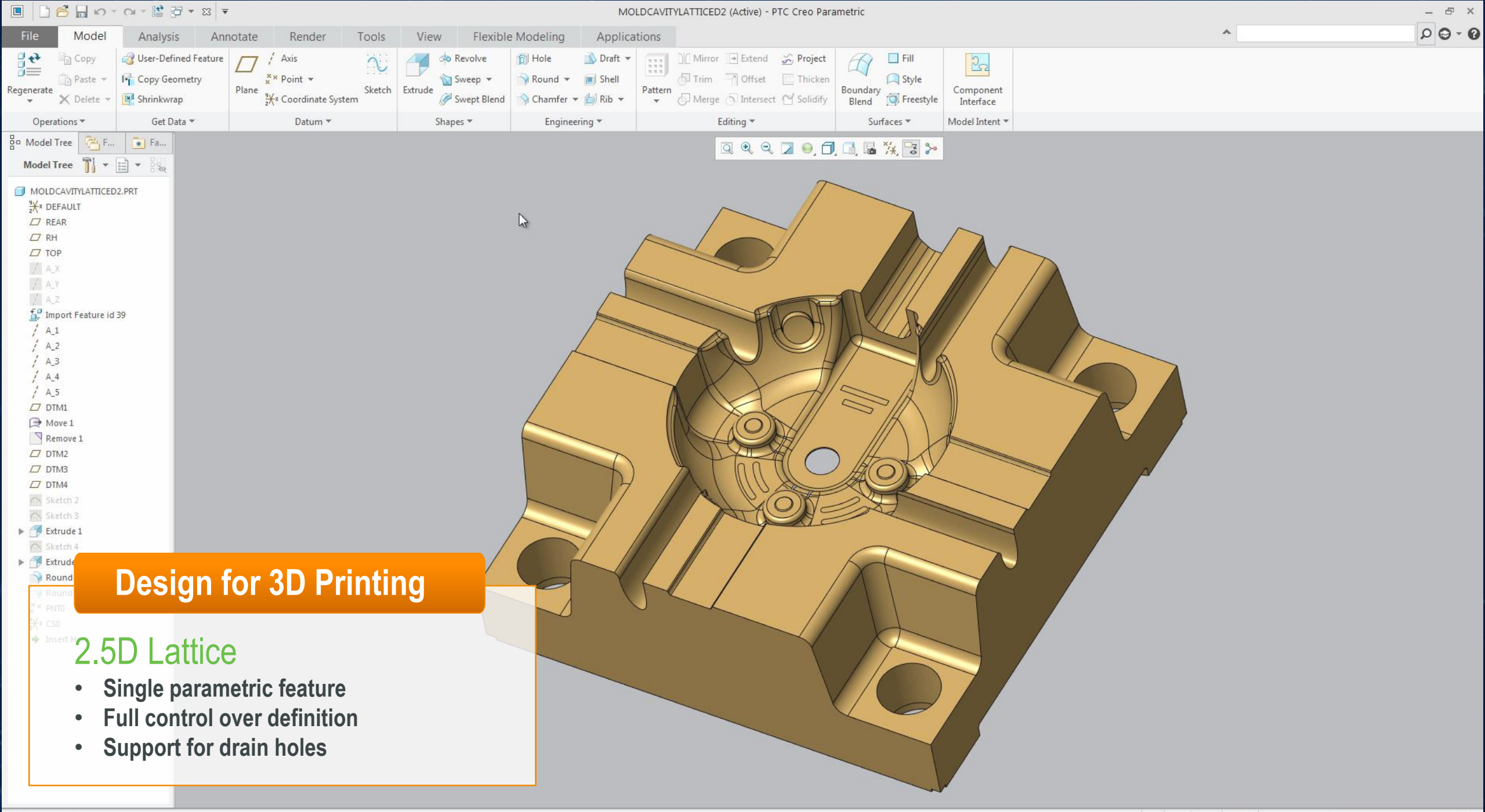

Design for 3D Printing

2.5D Lattice

- Single parametric feature
- Full control over definition
- Support for drain holes

DESIGN FOR ADDITIVE MFG

3D Lattice Structures

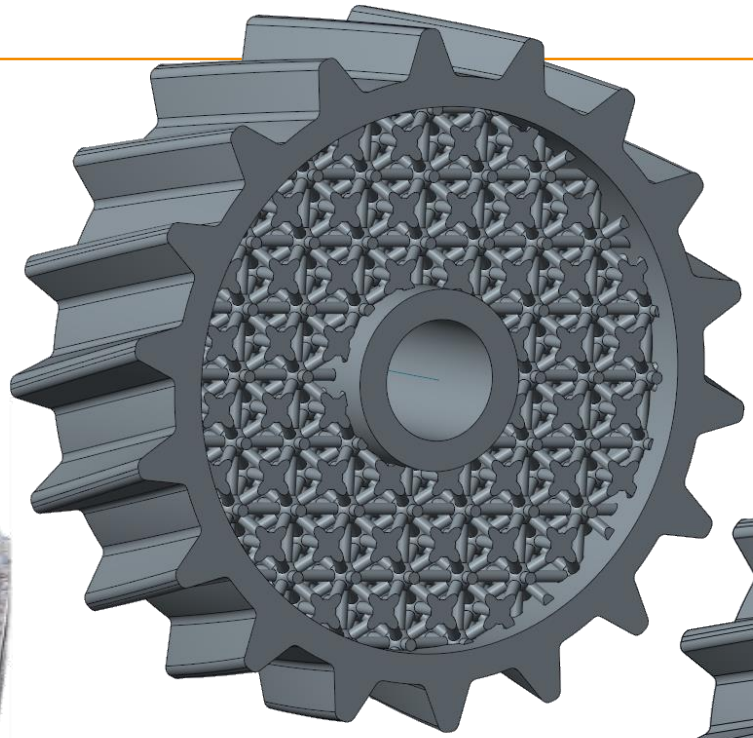

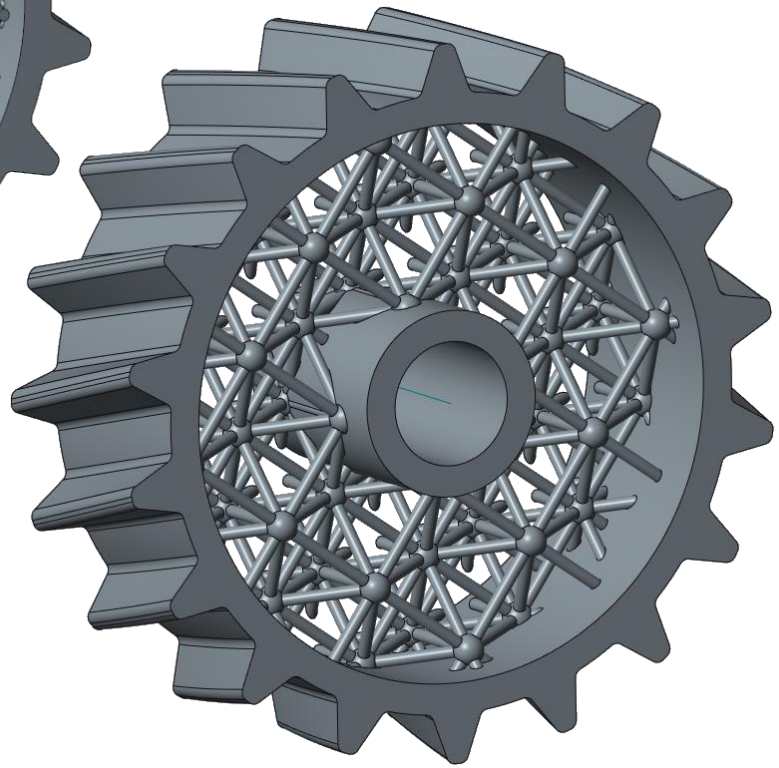

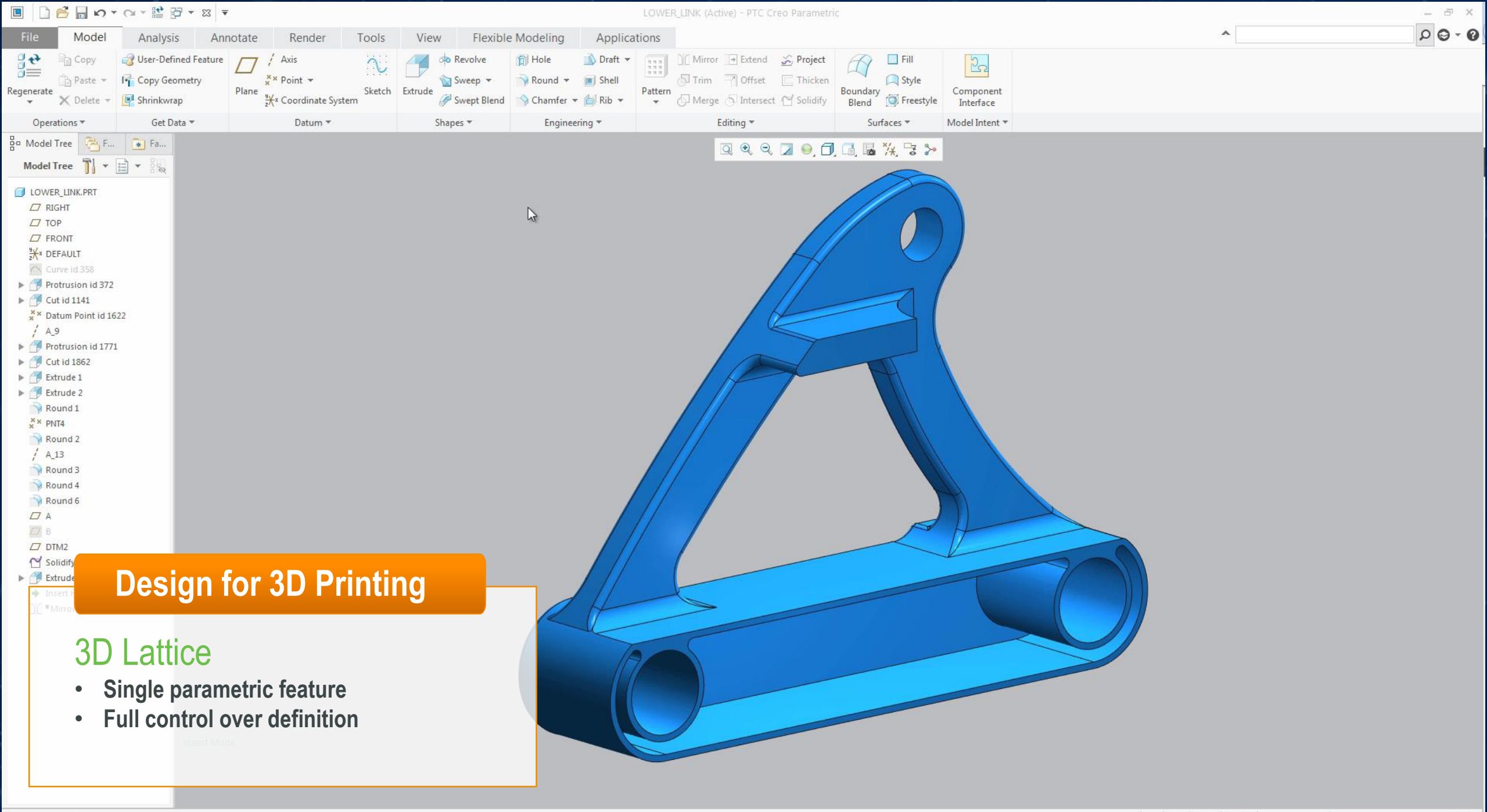

Design for 3D Printing

3D Lattice

- Single parametric feature
- Full control over definition

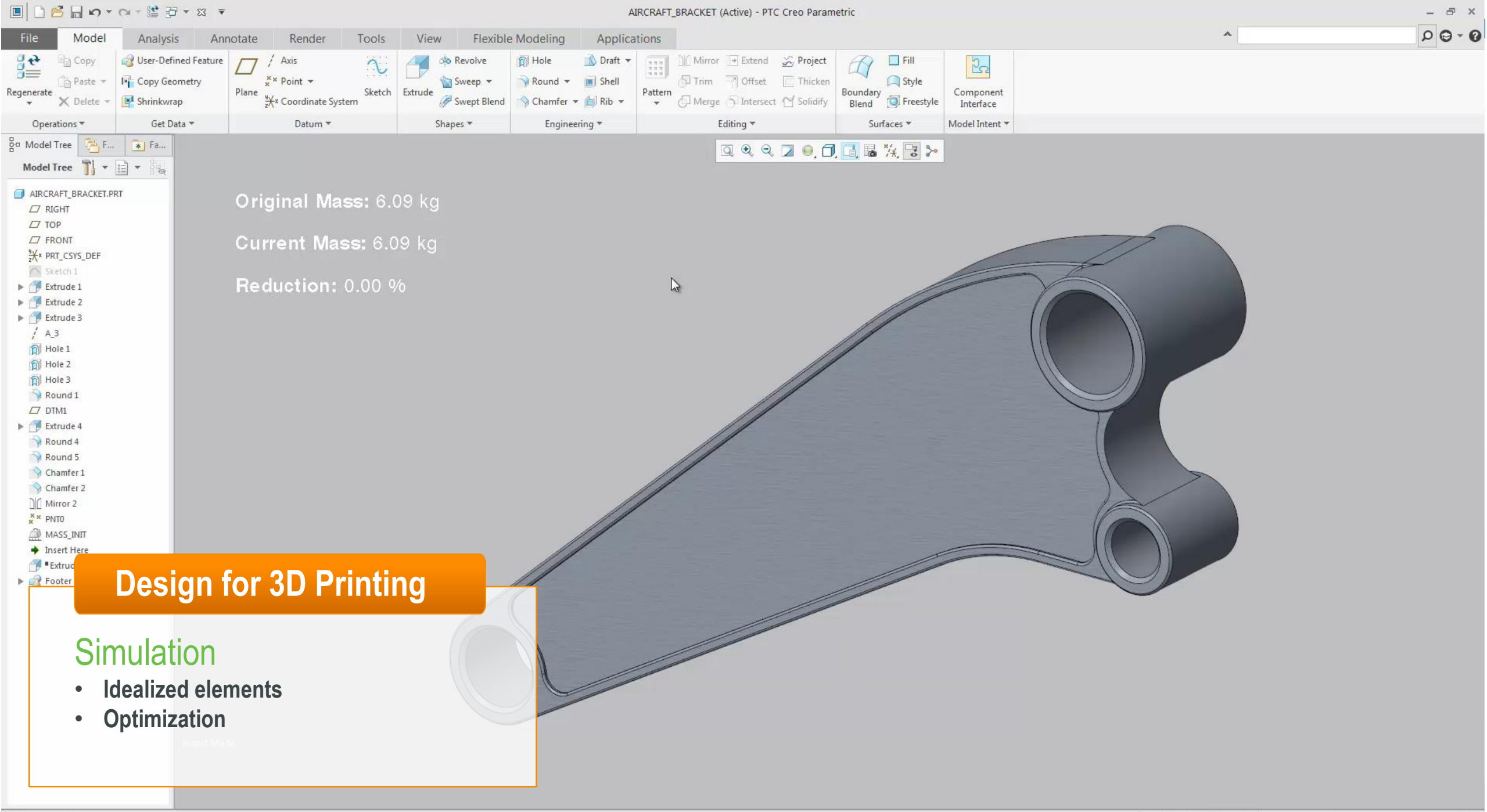
AIRCRAFT_BRACKET (Active) - PTC Creo Parametric
File
Model
Analysis
Annotate
Render
Tools
View
Flexible Modeling
Applications
Regenerate
Copy
Paste
Delete
Operations
User-Defined Feature
Copy Geometry
Shrinkwrap
Get Data
Plane
Axis
Point
Coordinate System
Sketch
Datum
Extrude
Revolve
Sweep
Swept Blend
Shapes
Hole
Round
Chamfer
Draft
Shell
Rib
Engineering
Pattern
Mirror
Trim
Merge
Extend
Offset
Intersect
Project
Thicken
Solidify
Editing
Boundary Blend
Fill
Style
Freestyle
Surfaces
Component Interface
Model Intent
Model Tree
AIRCRAFT_BRACKET.PRT
RIGHT
TOP
FRONT
PRT_CSYS_DEF
Sketch 1
Extrude 1
Extrude 2
Extrude 3
A_3
Hole 1
Hole 2
Hole 3
Round 1
DTM1
Extrude 4
Round 4
Round 5
Chamfer 1
Chamfer 2
Mirror 2
PNT0
MASS_INIT
Insert Here
Footer
Original Mass: 6.09 kg
Current Mass: 6.09 kg
Reduction: 0.00 %
Design for 3D Printing
Simulation
• Idealized elements
• Optimization
Mapkey nn has been successfully recorded in memory.
Geometry

DESIGN FOR ADDITIVE MFG

Design for 3D Printing

Lattice Analysis and Optimization

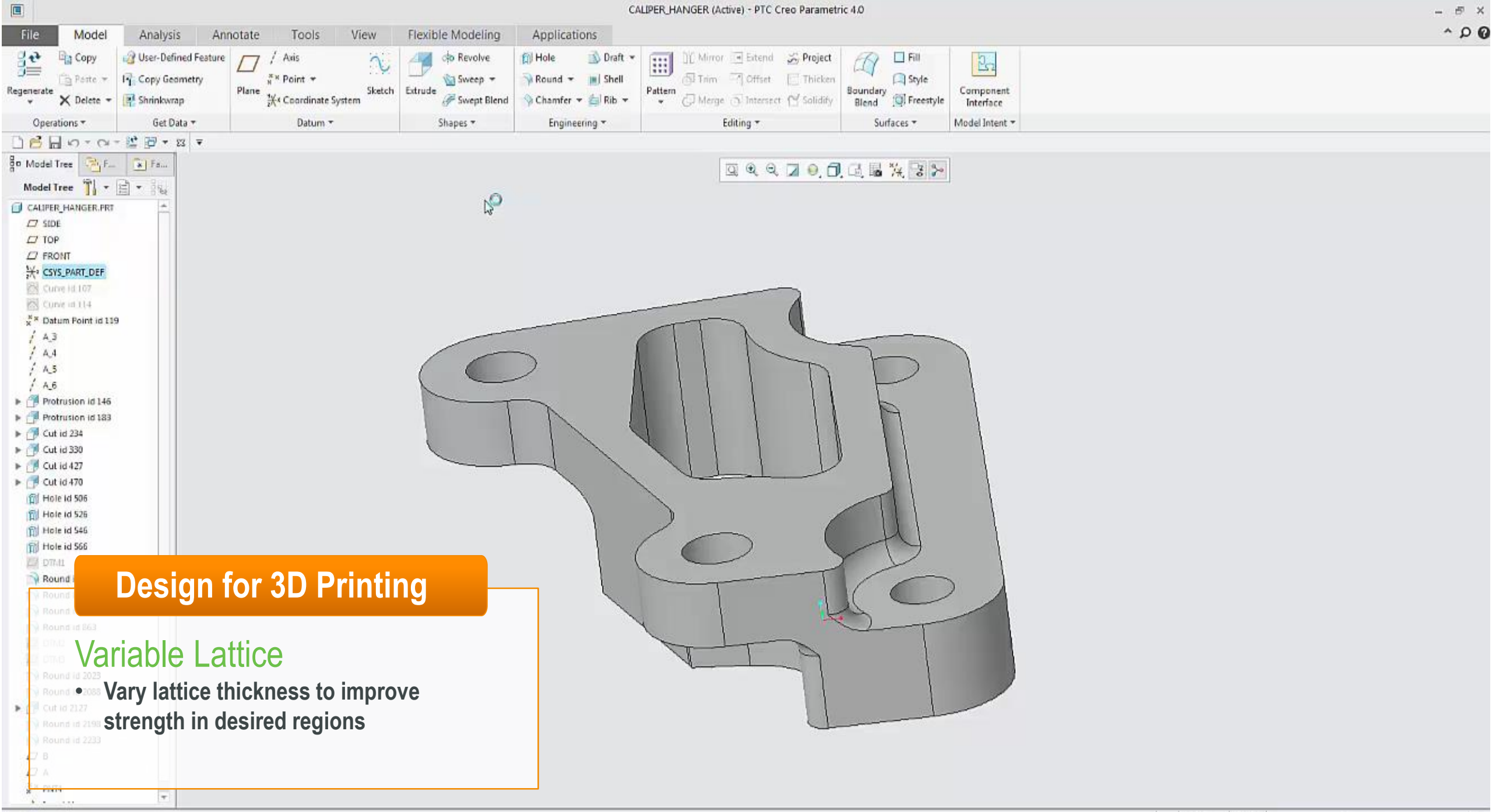

Design for 3D Printing

Variable Lattice

- Vary lattice thickness to improve strength in desired regions

DESIGN FOR ADDITIVE MFG

Engineering Product Performance

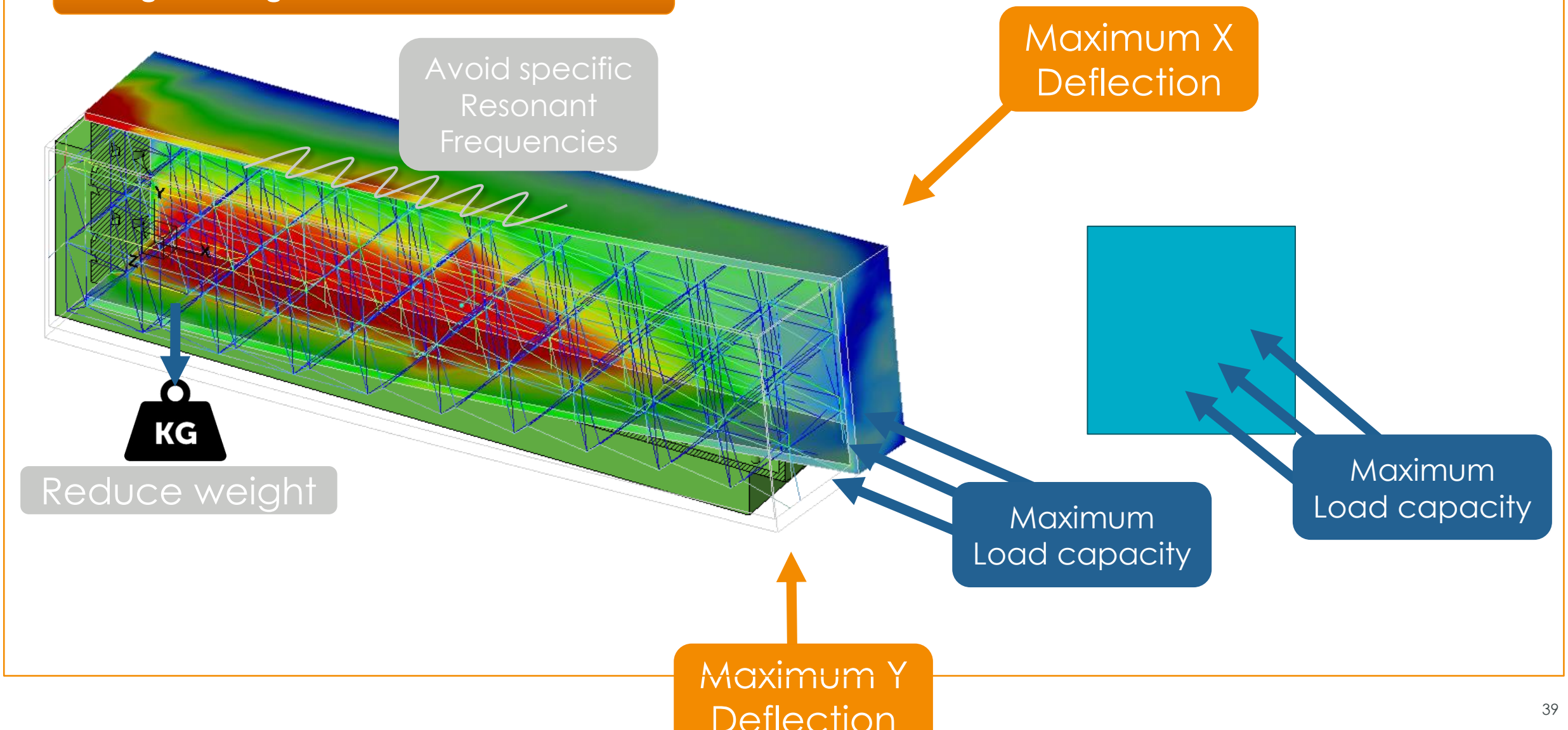

DESIGN FOR ADDITIVE MFG

Engineering Product Performance

Race bike swingarm

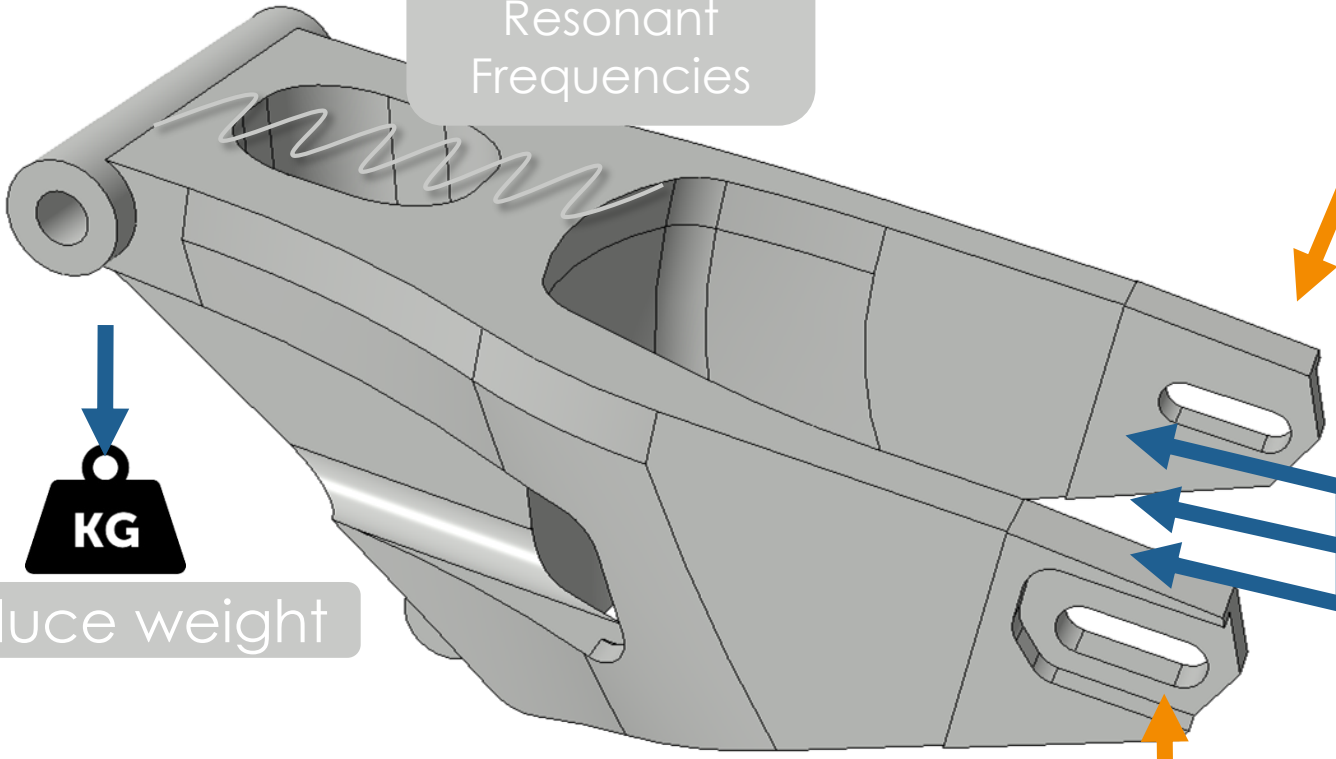

Maximum X Deflection

Maximum Load capacity

Maximum Y Deflection

DESIGN FOR ADDITIVE MFG

Engineering Product Performance

Race bike swingarm

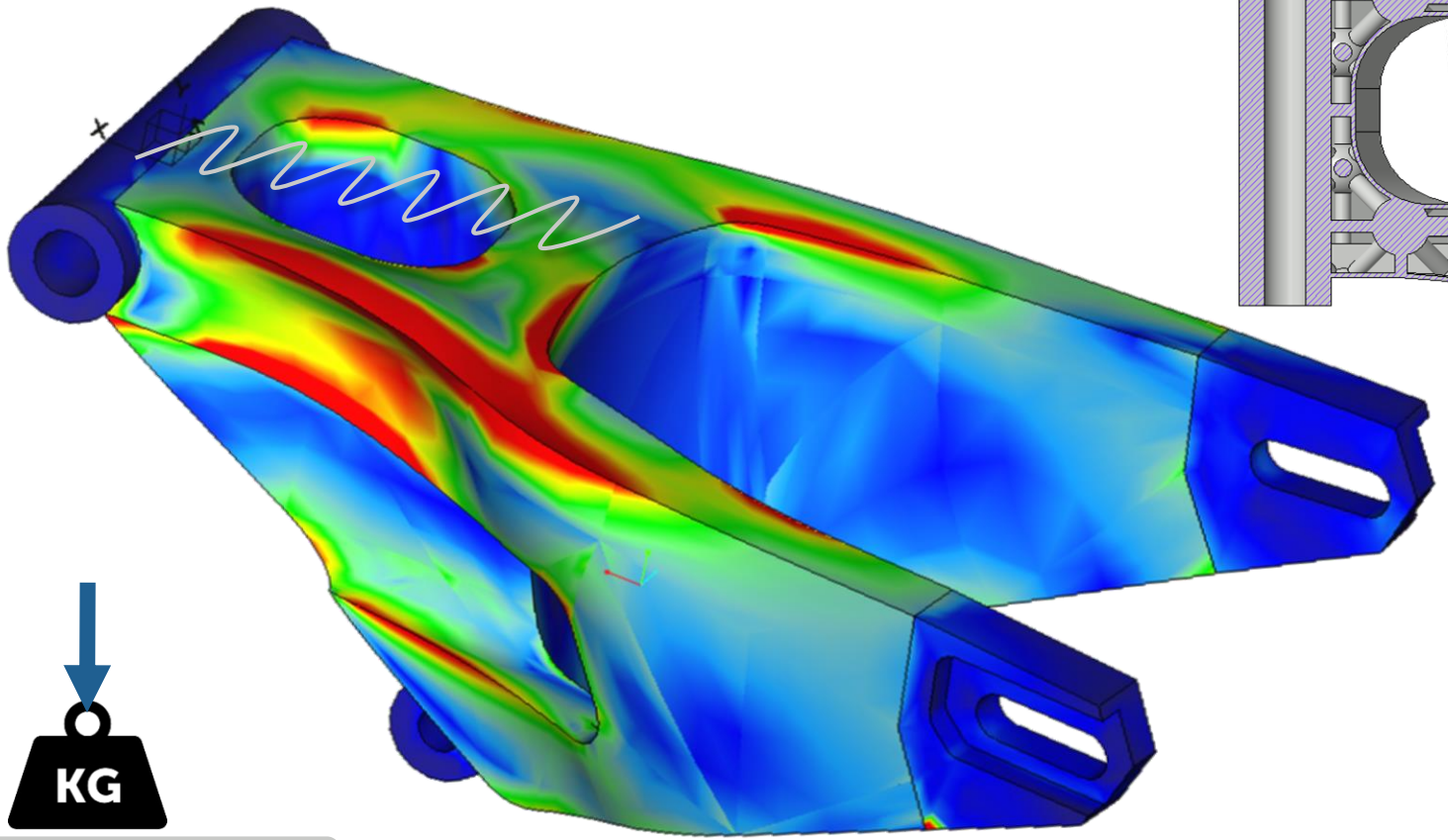

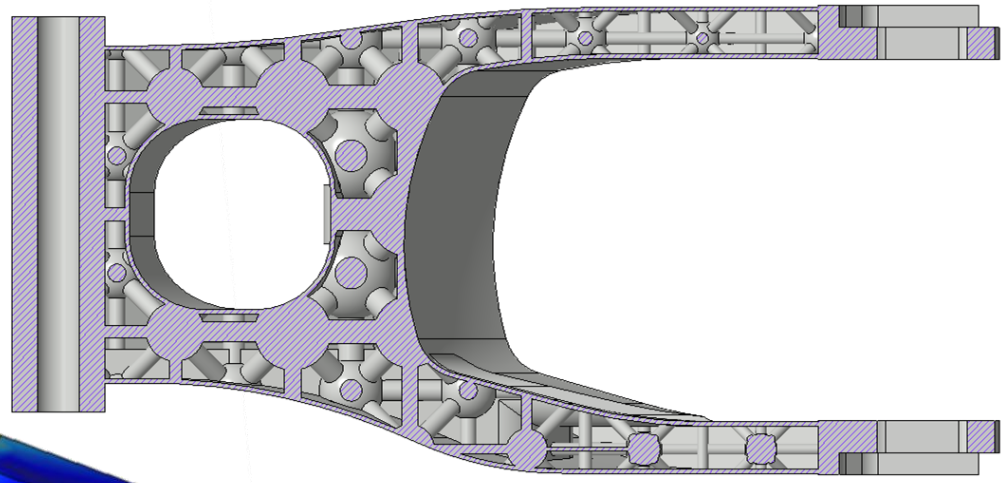

Reduce weight

ROAD TO CREO 4.0

- Creo 4.0 Sneak Peek
  - Sneak peek of Creo 4.0 for all customers
  - Embedded Timed License includes almost all of the new functionality
    - No requirement to update existing licenses
    - License expires 5 August 201
- A great opportunity for you
  - Test Creo 4.0 Sneak Peek
  - Evaluate new paradigms
  - Evaluate modules you current do not own
- Communicate and Share Feedback
  - Restricted access to PTC Comn
  - Request membership
    - Contact sneakpeek@ptc.com
- Planned Release Date of Creo 4.0:
  - End of 2016

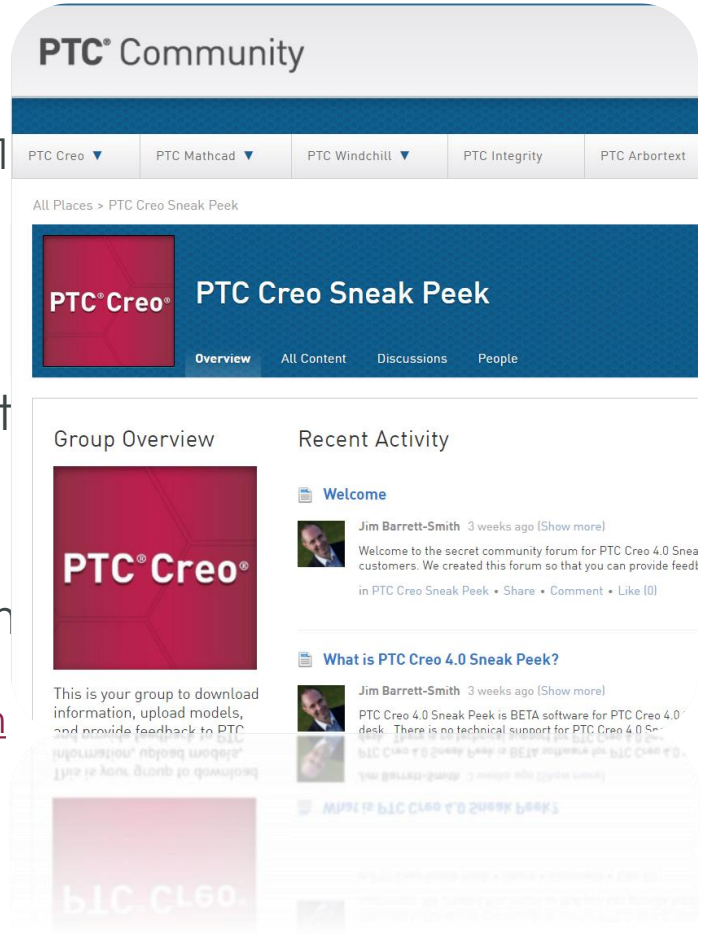

www.ptcusercommunity.com/groups/ptc-creo-sneak-peek

ptc