Z88 in the FVA-Workbench

Analytical calculation methods supplemented by FEM in drive technology

Dipl.-Ing. Georg Hammerl

© FVA GmbH

Agenda

- **Research Association for Drive Technology (FVA e.V.)**
- Z88 in the FVA-Workbench
- Standardized „One-Click FEM“
- Conclusion

Z88 in the FVA-Workbench

© FVA GmbH

Research Association for Drive Technology (FVA e.V.)

Objectives

research, drive & innovation

World leading Innovation Network for Drive Technology

- We support the competitiveness of small and medium sized enterprises
- We promote applied research in universities
- We provide highly qualified training opportunities for young scientists
- We are the communication and training platform for our members
- We develop professional calculation & simulation software

© FVA GmbH

50 Years Network research

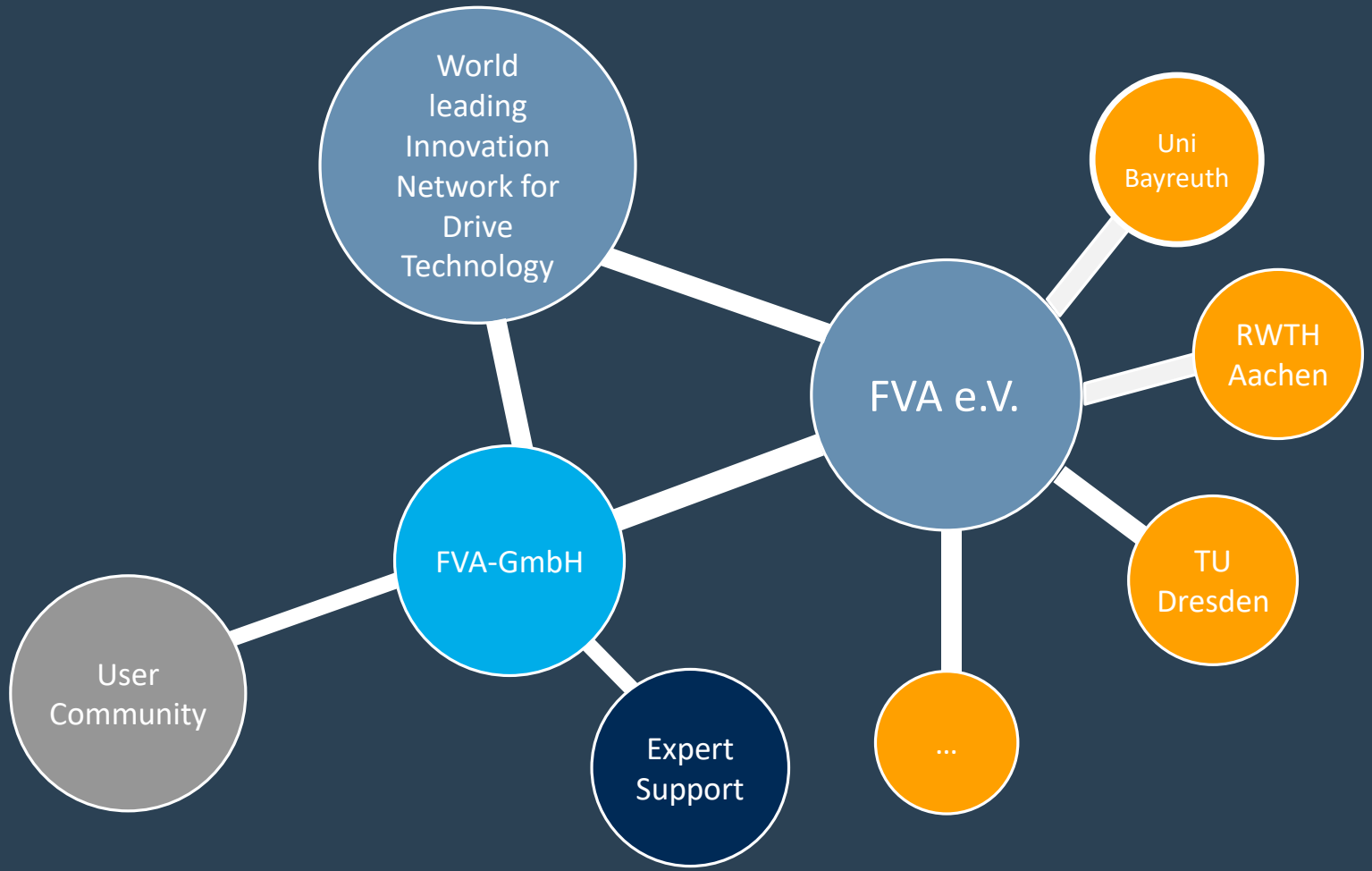

World leading Innovation Network for Drive Technology

FVA Software & Service

World leading Innovation Network for Drive Technology

© FVA GmbH

Research Association for Drive Technology (FVA e.V.)

Benefits for Members

- 206 Companies with 2.000 industry experts
- Approx. 100 institute with approx. 300 research staff, professors and senior engineers
- Approx. **13,800,000** Euro research grant (2015)
- **25 working groups**
- Over **200 research projects** and **studies** per year
- **Themis**: community-platform for FVA-members
- **Congresses, seminars** and **simulation software**

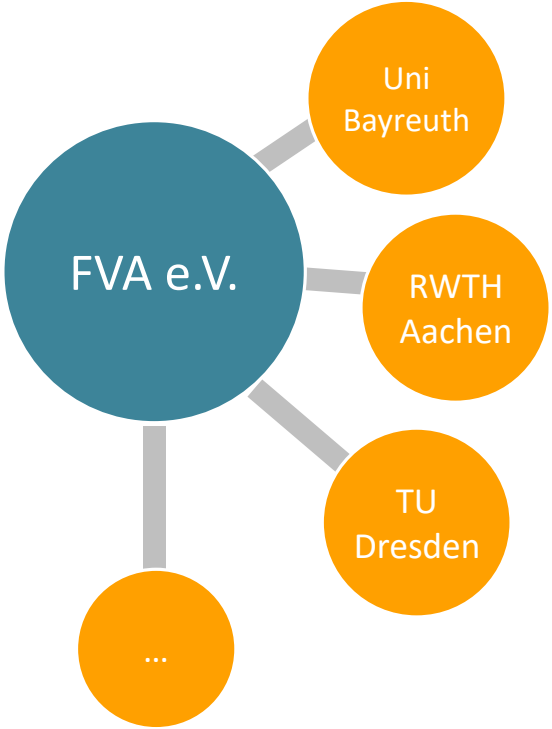

© FVA GmbH

FVA Software & Service

Research made real

- Conservation of research results generated in the FVA e.V.
- Supporting research and industry in software development
- Knowledge transfer for the industry (together with research)

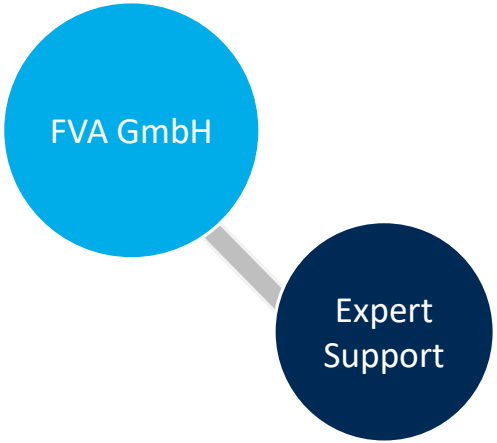

© FVA GmbH

Our Services for the Drive Technology Industry

Consultant Services & Support

Simulation Software

Trainings & Conferences

FVA-Workbench

© FVA GmbH

Agenda

- Research Association for Drive Technology (FVA e.V.)
- **Z88 in the FVA-Workbench**
- Standardized „One-Click FEM“
- Conclusion

Z88 in the FVA-Workbench

© FVA GmbH

FVA-Workbench: Gear train calculations

Gears
Bearings
Shafts

Load capacity
Life time calculation
Safeties

© FVA GmbH

FVA-Workbench: Gear train calculations

- Components which can be parametrized
  - Analytical model for gears and bearings (>40 years of research)
  - Shafts modeled with 1D-Timoshenko beams
  - Tools validated with experiments → Fast reliable results
- Challenge: Integration of complex geometries
  - Gear casing
  - Planet carriers

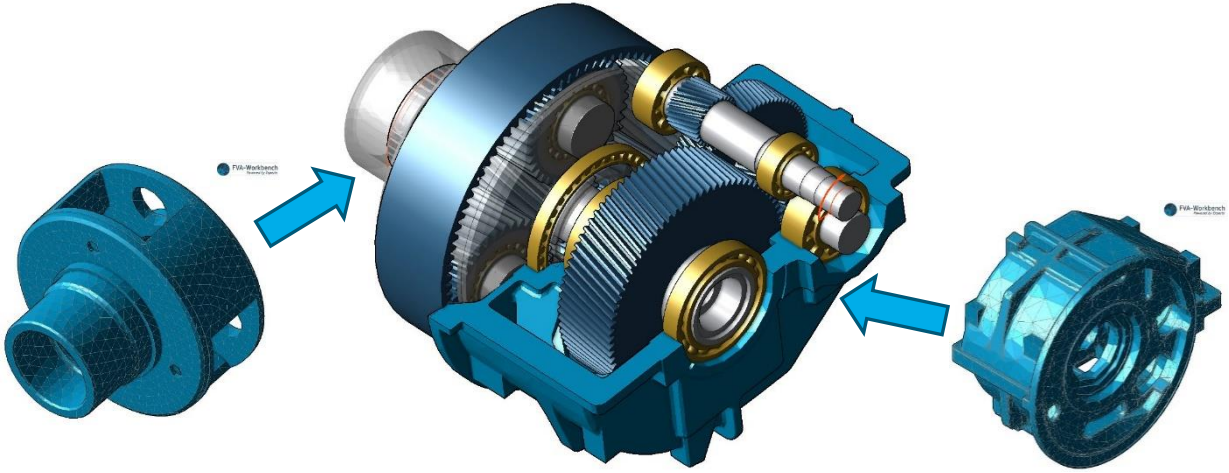

© FVA GmbH

FEM in the FVA-Workbench = Z88

- Connecting FEM components to beam elements of the gear system (developed in FVA 711 I "RIKORplusZ88")

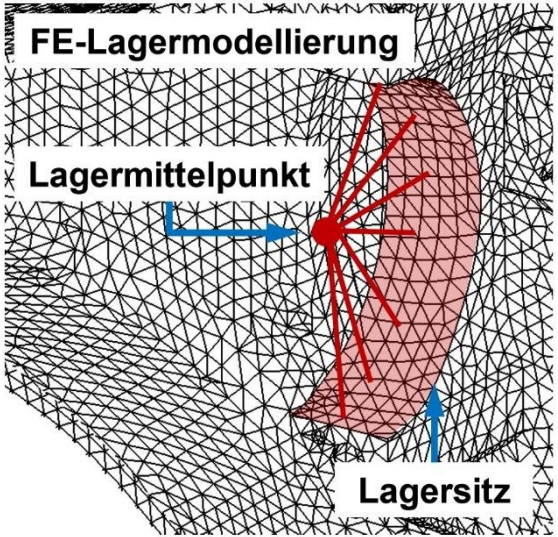

[Final Report FVA 711 I "RIKORplusZ88"]

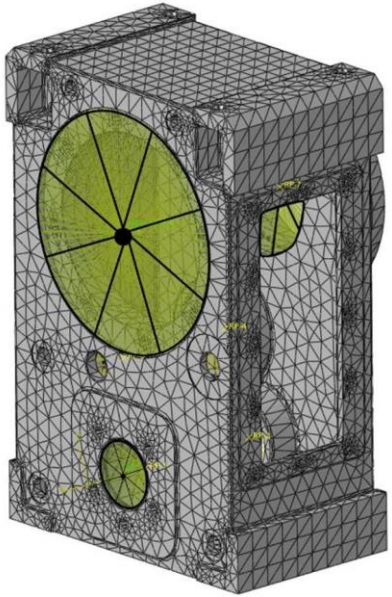

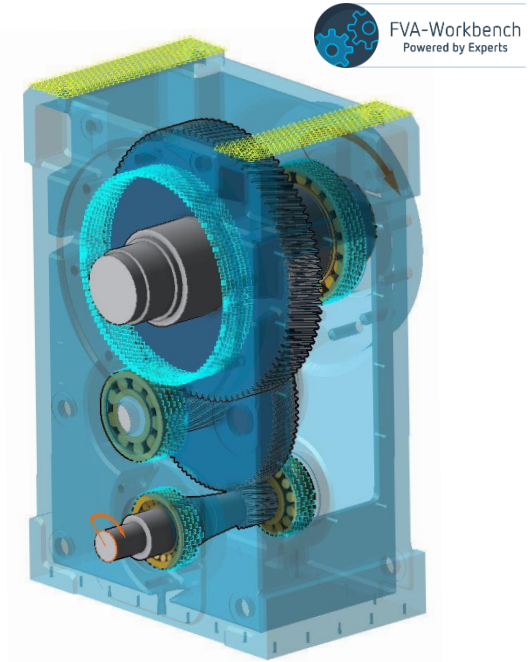

[courtesy by RSGetriebe]

© FVA GmbH

FEM in the FVA-Workbench = Z88

K (from 3D FEM)

K_{mod}

Rigid rods

reduction points

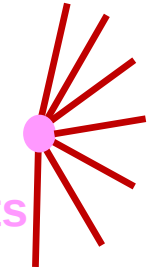

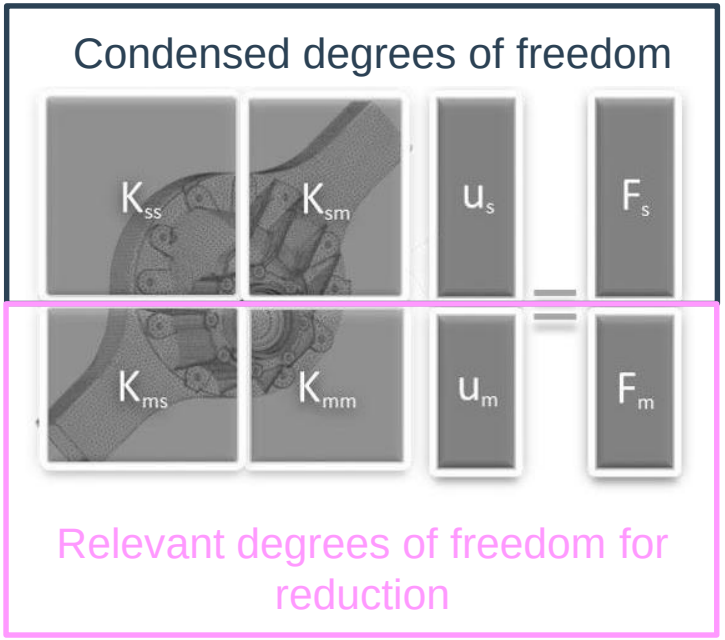

[Final Report FVA 711 I "RIKORplusZ88"]

© FVA GmbH

FEM in the FVA-Workbench = Z88

- Static reduction according to Guyan (implemented in FVA 711 I by CAD)

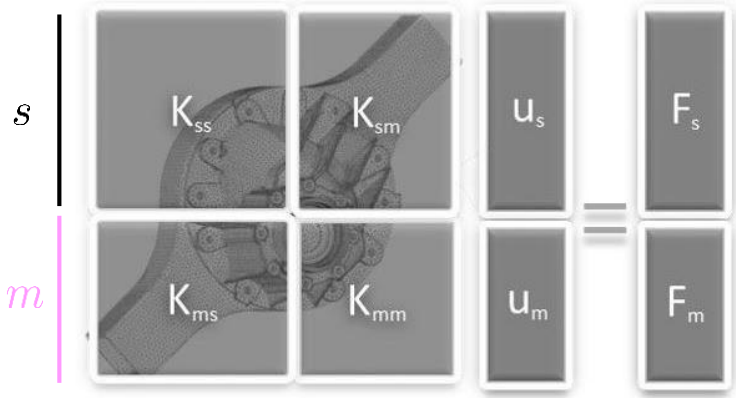

$$\begin{pmatrix} K_{ss} & K_{sm} \\ K_{ms} & K_{mm} \end{pmatrix} \begin{pmatrix} u_s \\ u_m \end{pmatrix} = \begin{pmatrix} 0 \\ F_m \end{pmatrix}$$

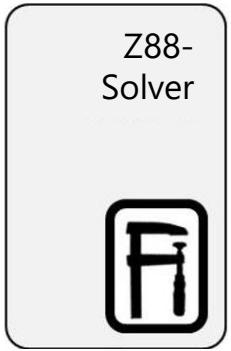

$$\underset{m \text{ x } m}{K_{\text{red}}} = \underset{(m+s) \text{ x } (m+s)}{T^{\text{T}} K_{\text{mod}} T}$$

$$T = \underset{(m+s) \text{ x } m}{\begin{pmatrix} -K_{ss}{}^{-1} K_{sm} \\ I \end{pmatrix}}$$

[Final report FVA 711 I „RIKORplusZ88“]

© FVA GmbH

FVA-Workbench: FEM ingredients for non-FEM experts

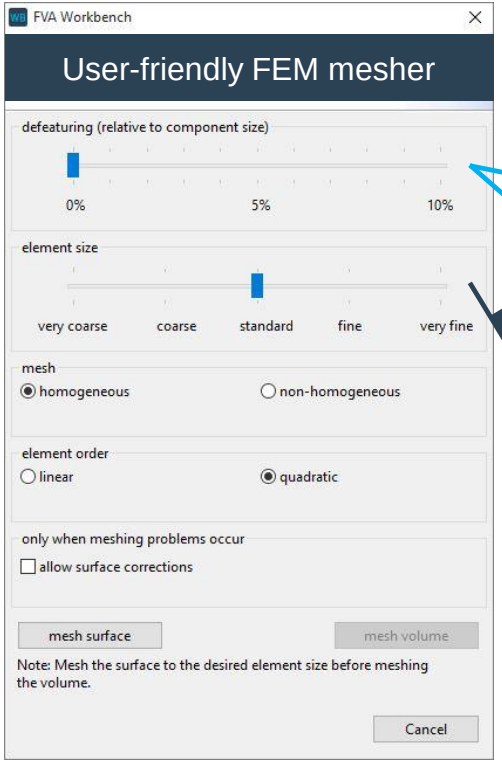

Component defeaturing

Resolution

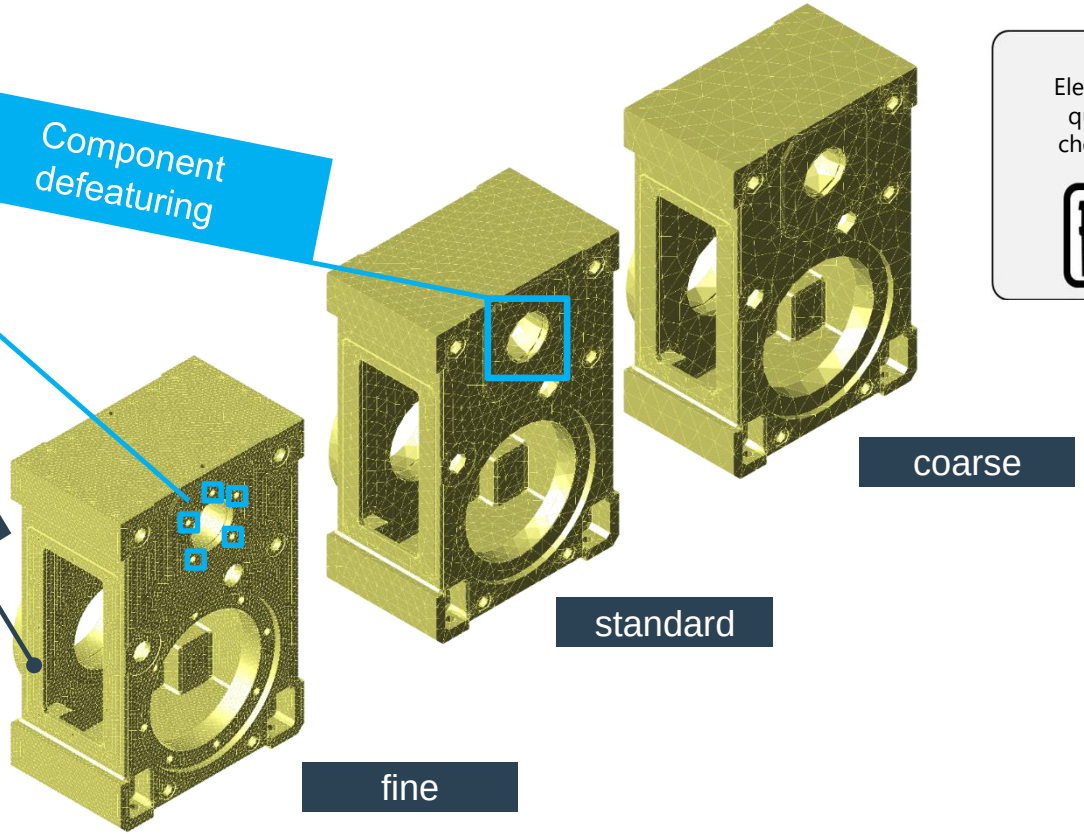

Z88-Element quality checker

© FVA GmbH

FVA-Workbench: FEM ingredients for non-FEM experts

- Visualization in the FVA-Workbench

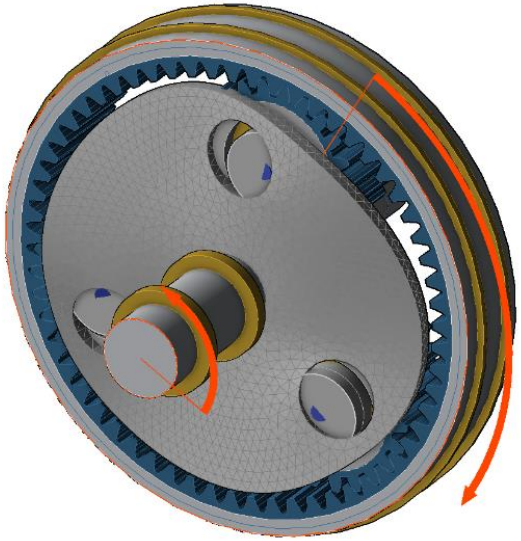

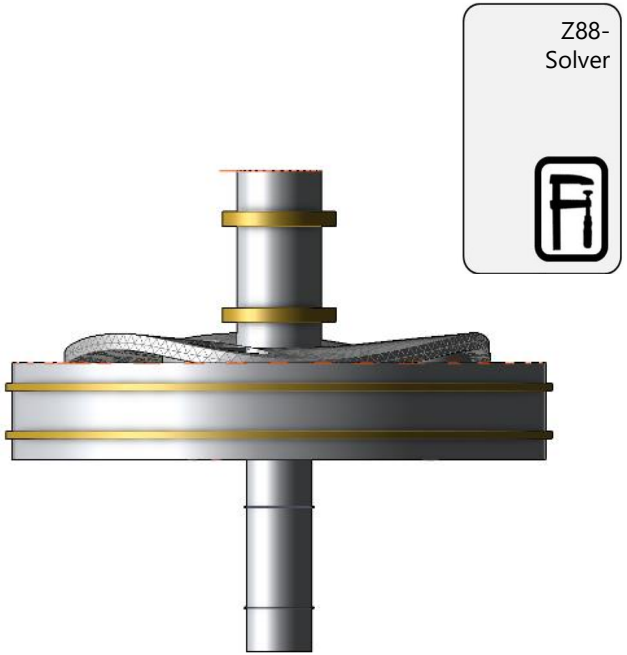

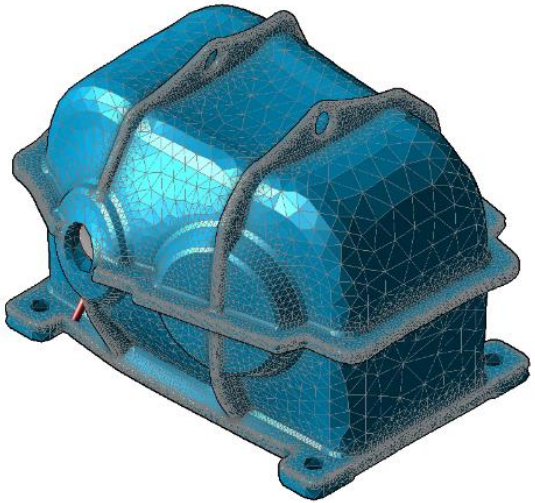

© FVA GmbH

Agenda

- Research Association for Drive Technology (FVA e.V.)
- Z88 in the FVA-Workbench
- **Standardized „One-Click FEM“**
- Conclusion

Z88 in the FVA-Workbench

© FVA GmbH

Standardized „One-Click FEM“

FEM-Calculation tailored for gear train analysis

- Machine elements in gear trains follow rules
- Shafts, gears and bearings can be described by a few parameters
- Assumptions can be made in order to relieve the user of work
  - Positions and dimensions of gear unit are available
  - Positioning of FE body with just a few clicks
  - Automatic determination of coupling nodes on the FE body

© FVA GmbH

Standardized „One-Click FEM“

Using FEM in the FVA-Workbench requires 4 steps

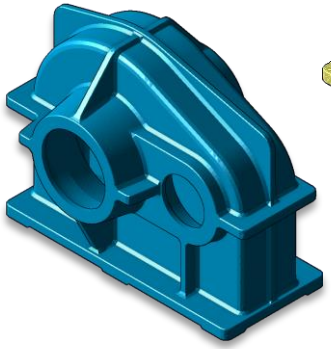

1. Import

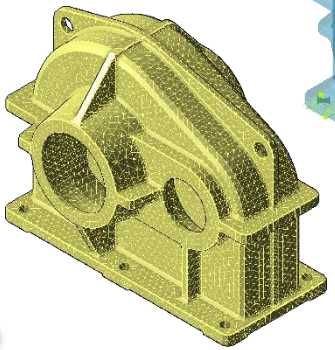

2. Meshing

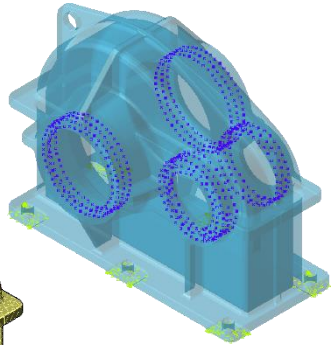

3. Boundary conditions

4. Calculation

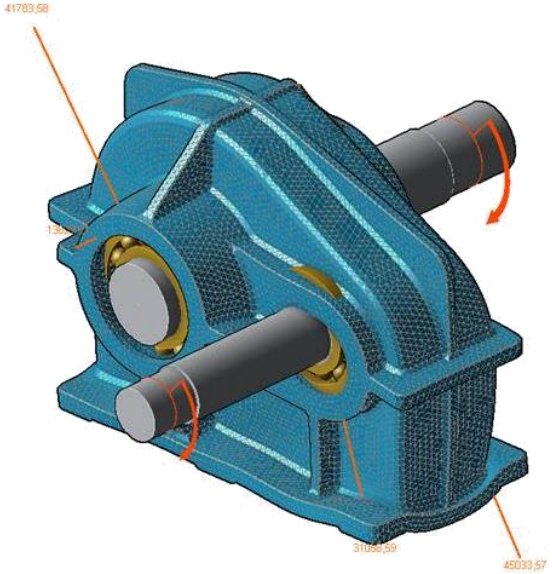

No need to change tools

© FVA GmbH

Standardized „One-Click FEM“

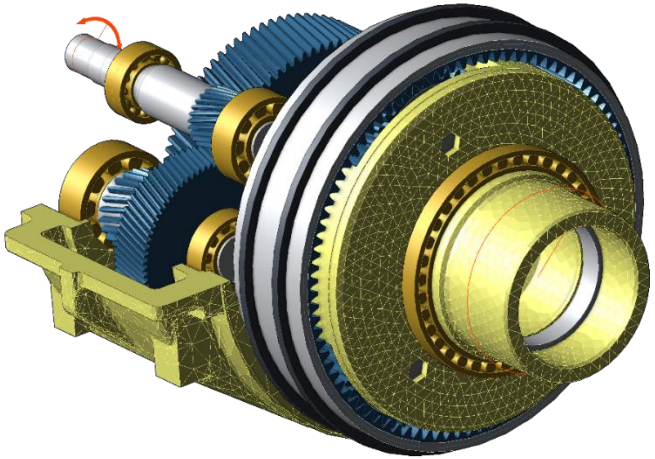

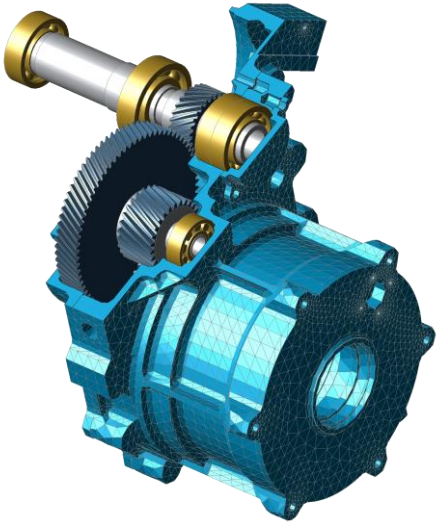

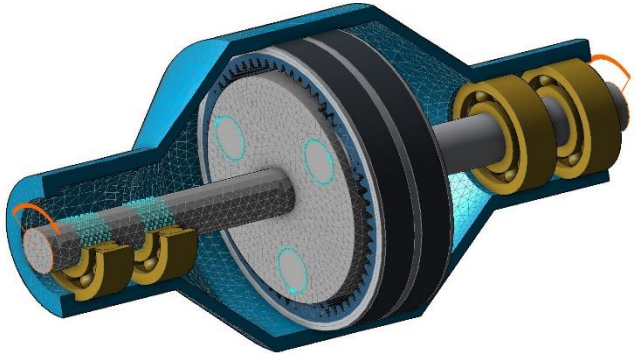

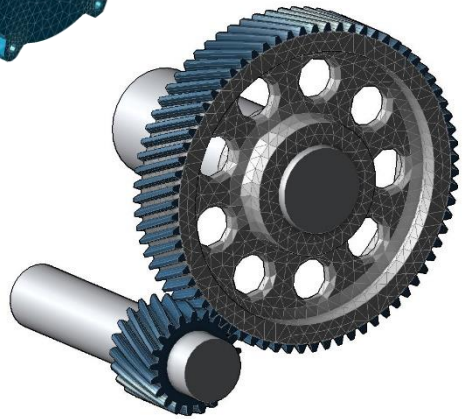

© FVA GmbH

Agenda

- Research Association for Drive Technology (FVA e.V.)
- Z88 in the FVA-Workbench
- Standardized „One-Click FEM“
- **Conclusion**

Z88 in the FVA-Workbench

© FVA GmbH

Conclusion

- FVA: Innovation network in drive technology
- Professional calculation & simulation software tailored for drive train analysis
- Analytical calculation methods supplemented by FEM in drive technology
- Thanks to CAD guys for the good cooperation

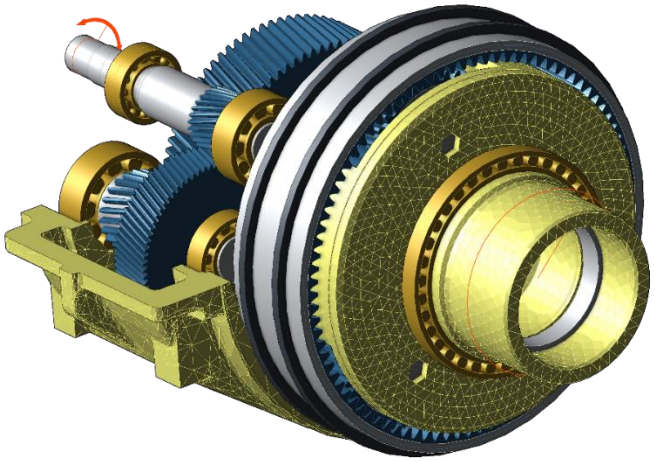

© FVA GmbH

Z88 in the FVA-Workbench

Analytical calculation methods supplemented by FEM in drive technology

FVA GmbH | Lyoner Str. 18 | 60528 Frankfurt / Main
www.fva-service.de
www.fva-net.de

Dipl.-Ing. Georg Hammerl

© FVA GmbH