PTC CREO UPDATE

CREO 4.0
CREO 5.0

Christoph von Andrian-Werburg
PTC

Klaus Raab
Inneo

September 20, 2018

INNEO®
That's IT.

K-TAG

20. Bayreuther 3D-Konstrukteurstag

20. September 2018

AGENDA

- PTC CAD Business Market Success
- PTC CAD Strategy
- PTC Creo 4.0, 5.0 and Beyond

FY16 Growth
12% YoY

CAD Business Worldwide
~5.0%* Growth Market

FY17 Growth
13% YoY

* CIMdata

MAJOR TRENDS

"Traditional product development processes will fail companies that seek to optimize product value and customer experiences through software enabled IoT products."

– Nate Fleming, Forrester

40%

*of Top 100 discrete manufacturers plan to provide **Product as a Service** platforms*

- IDC

51%

of research respondents who say IoT is critical to their **organization's future success**

- VDC Research

84%

of products (or more) from best-in-class manufacturers hit their revenue, cost, launch date, and quality targets using model based engineering

- Aberdeen

The Digital Thread

"Unleashing a seamless flow of data across the value chain that will link every phase of the product life cycle: from design, sourcing, testing, and production to distribution, point of sale, and use."

– McKinsey

The PHYSICAL and DIGITAL
worlds have converged

Customer Value Chains
are changing

“The changing nature of products is disrupting value chains, forcing companies to rethink and retool nearly everything they do.”

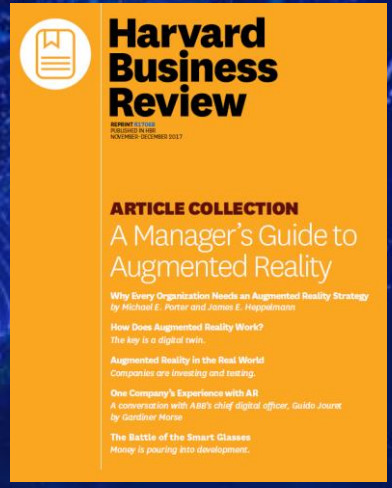

Product Design is changing

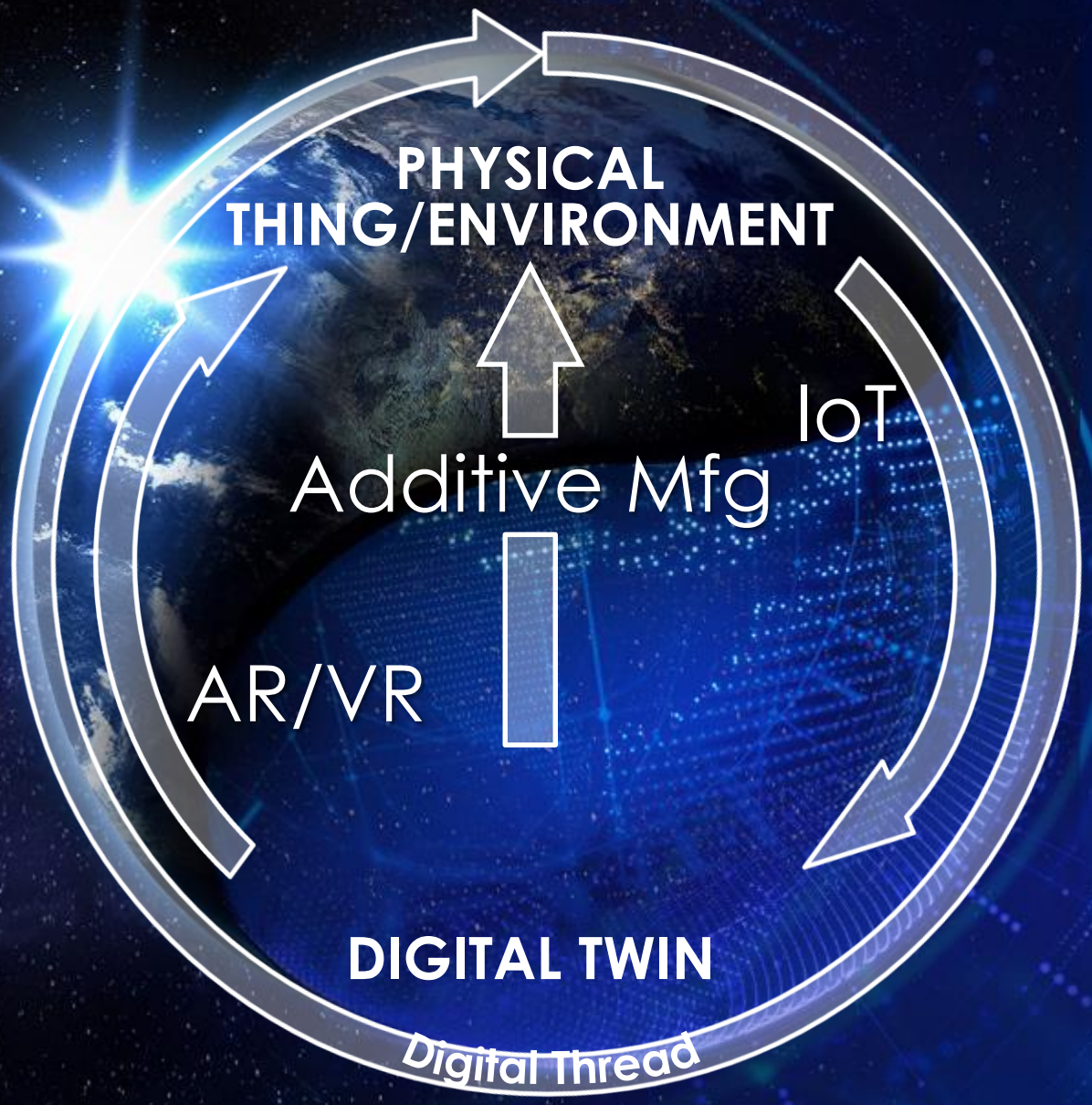
PHYSICAL
THING/ENVIRONMENT
IoT
Additive Mfg
AR/VR
DIGITAL TWIN
Digital Thread

LATEST INNOVATIONS IN CREO

Productivity Improvements

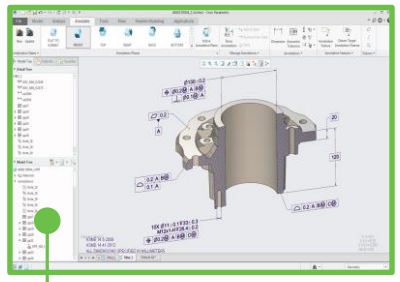

Model Based Definition

Augmented Reality

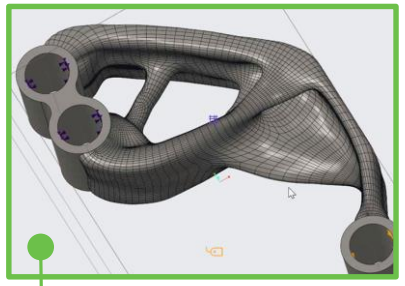

Topology Optimization

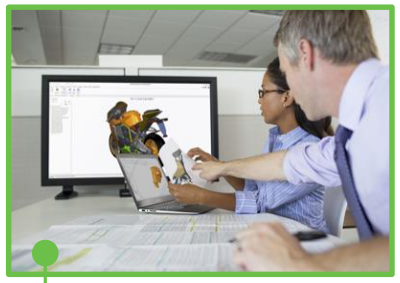

Unite Technology

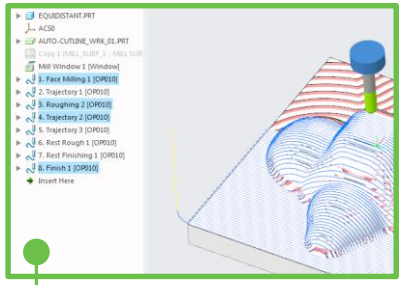

Mold Machining

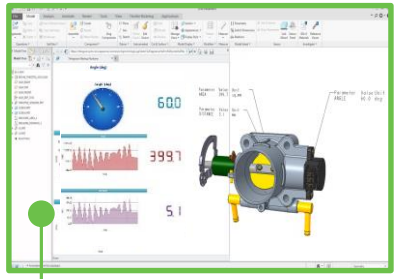

Design for Connectivity/IoT

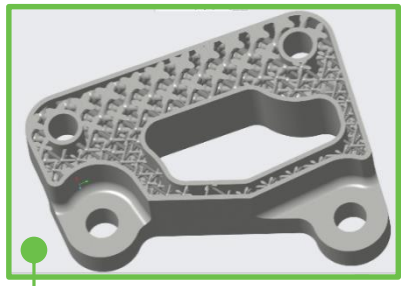

Lattice Features for Additive Mfg

Polymer & Metal Printability Checks

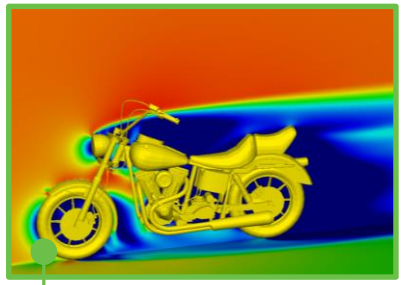

Computational Fluid Dynamics

PRODUCTIVITY IMPROVEMENTS

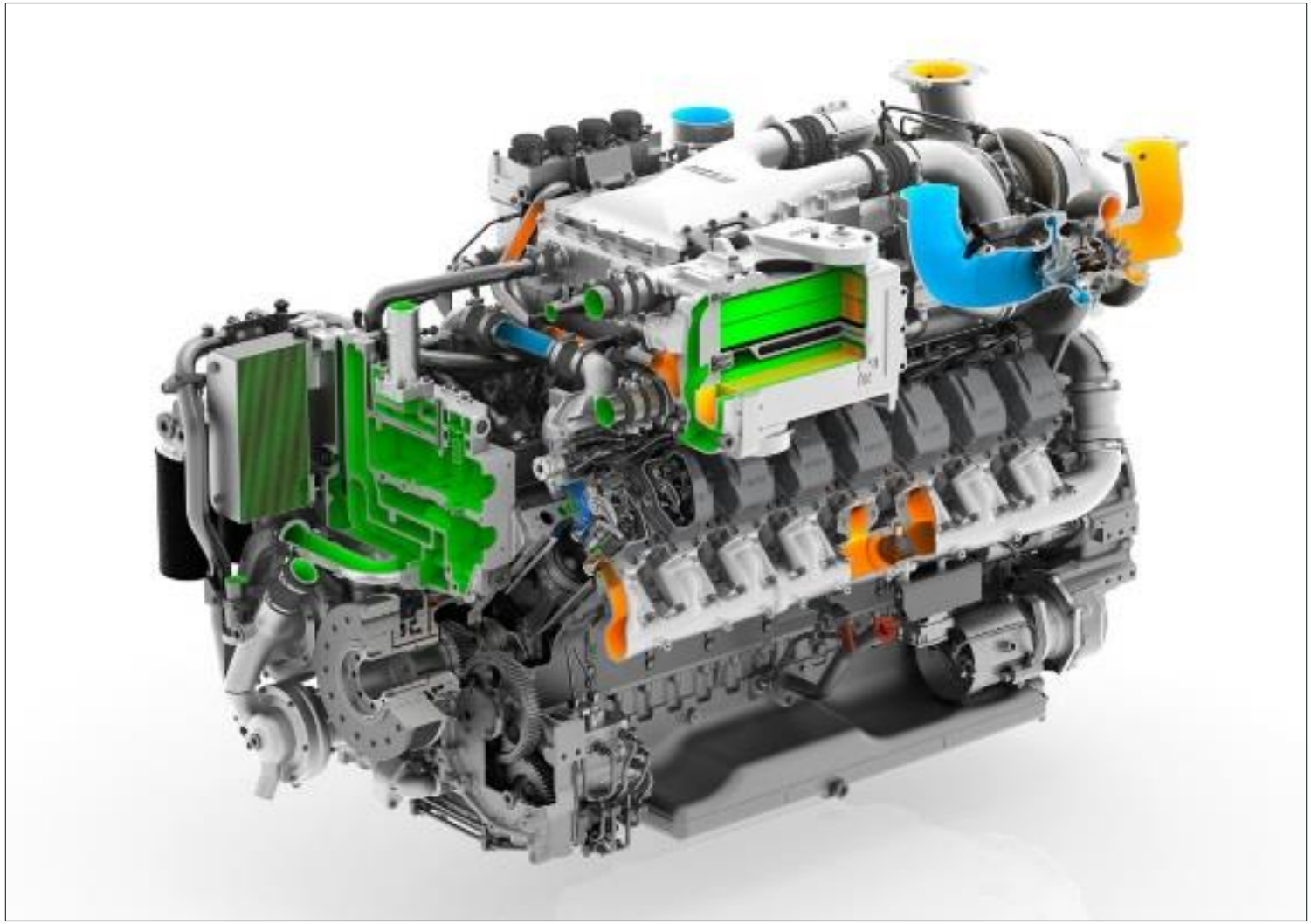

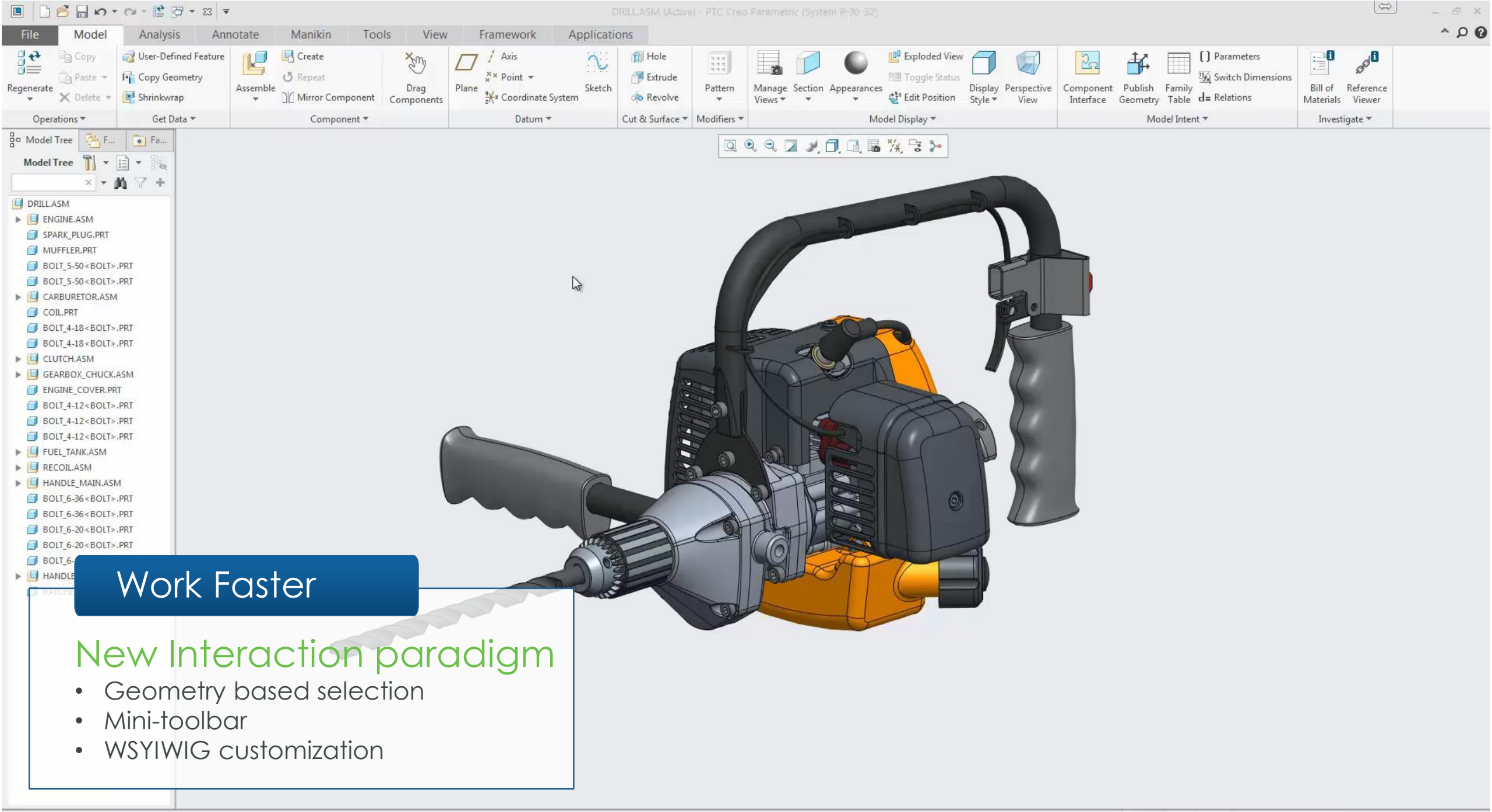

Work Faster

New Interaction paradigm

- Geometry based selection
- Mini-toolbar
- WSYIWIG customization

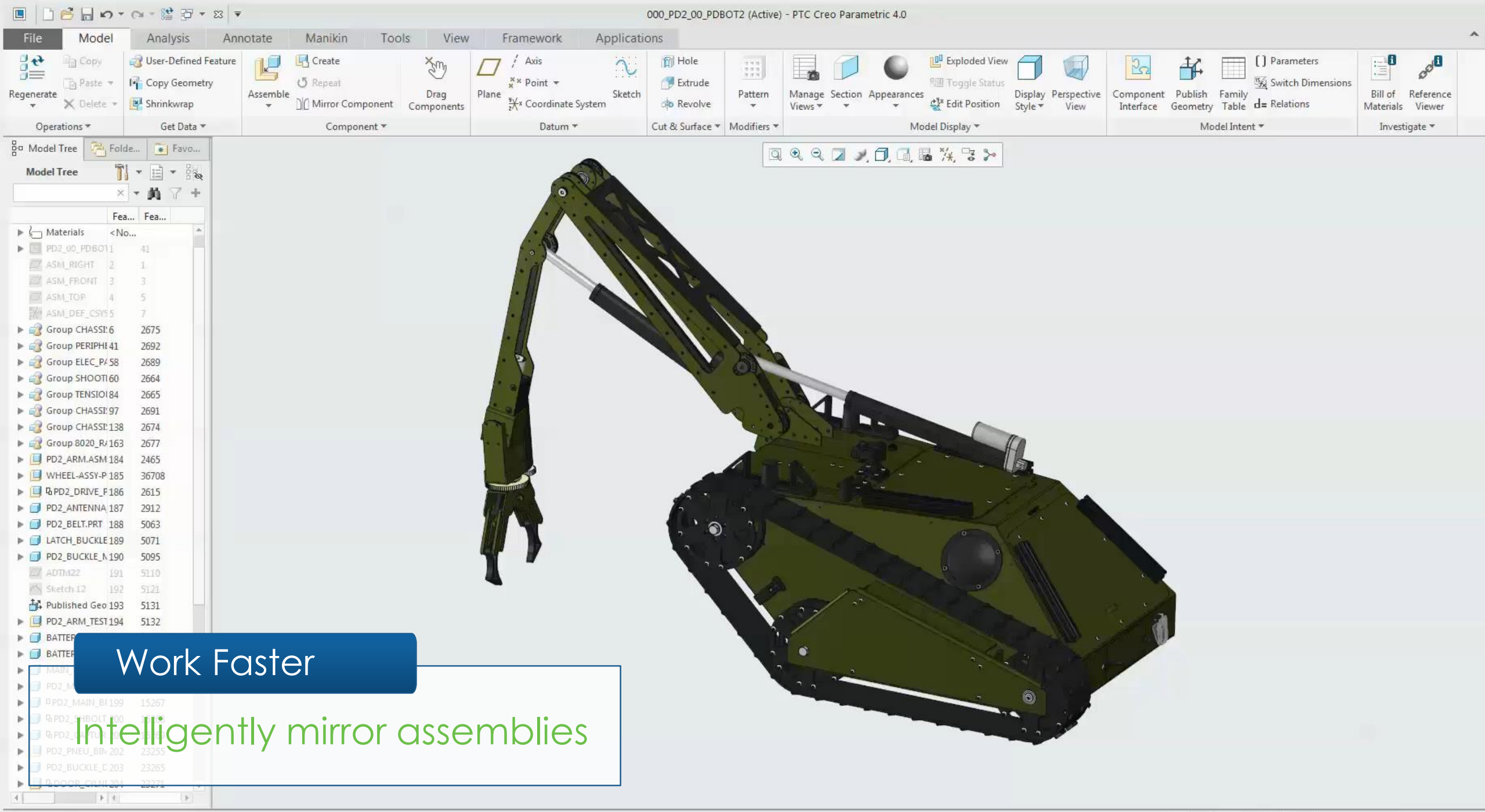

Work Faster

Intelligently mirror assemblies

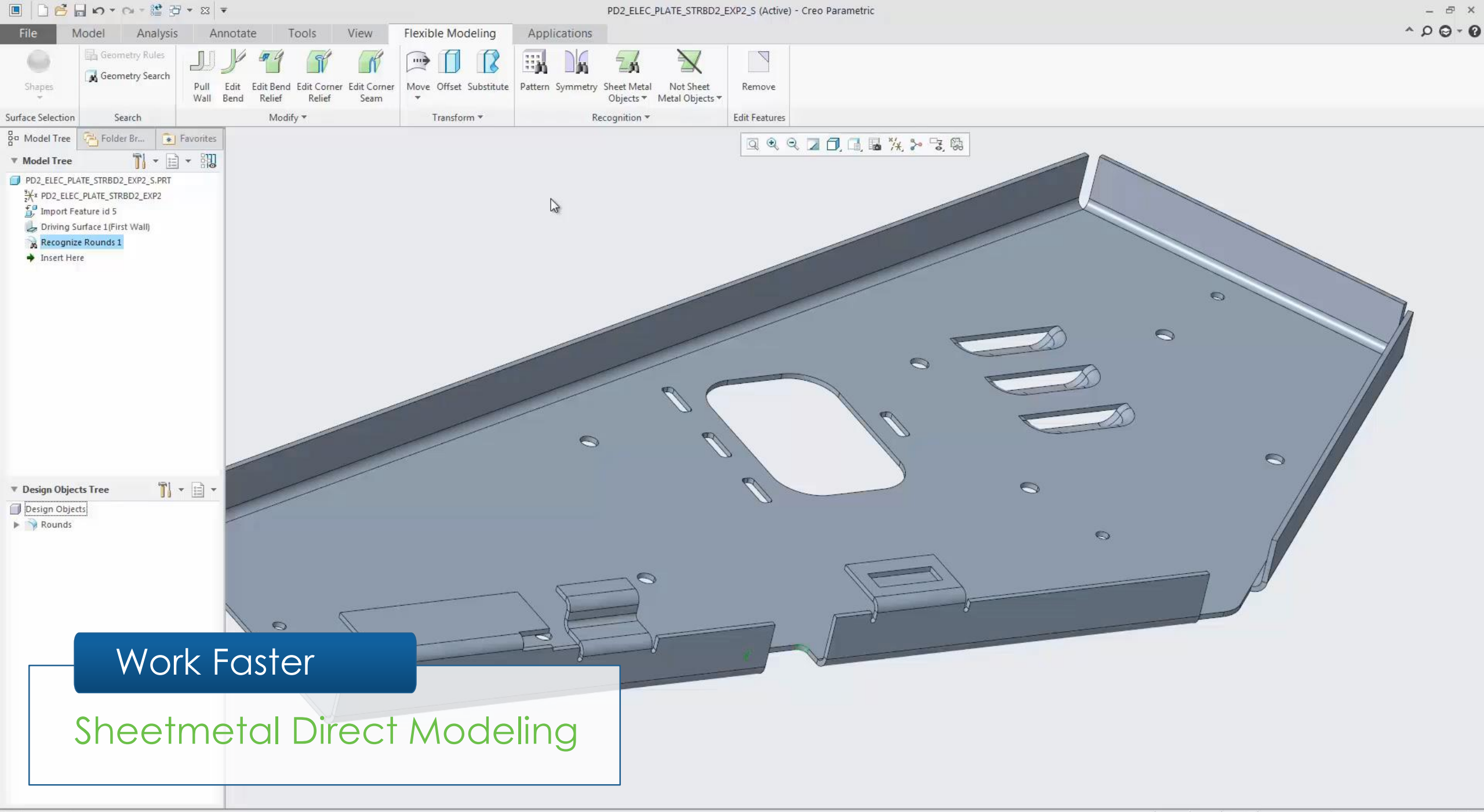
PD2_ELEC_PLATE_STRBD2_EXP2_S (Active) - Creo Parametric
File
Model
Analysis
Annotate
Tools
View
Flexible Modeling
Applications
Shapes
Surface Selection
Geometry Rules
Geometry Search
Search
Pull Wall
Edit Bend
Edit Bend Relief
Edit Corner Relief
Edit Corner Seam
Modify
Move
Offset
Substitute
Transform
Pattern
Symmetry
Sheet Metal Objects
Not Sheet Metal Objects
Recognition
Remove
Edit Features
Model Tree
Folder Br...
Favorites
Model Tree
PD2_ELEC_PLATE_STRBD2_EXP2_S.PRT
PD2_ELEC_PLATE_STRBD2_EXP2
Import Feature id 5
Driving Surface 1(First Wall)
Recognize Rounds 1
Insert Here
Design Objects Tree
Design Objects
Rounds
1 selected
Sheet Metal Items
Work Faster
Sheetmetal Direct Modeling

SAMPLE FEATURE ENHANCEMENTS

Draft with Rounds

- Drafts models containing rounds and chamfers without removing or reordering

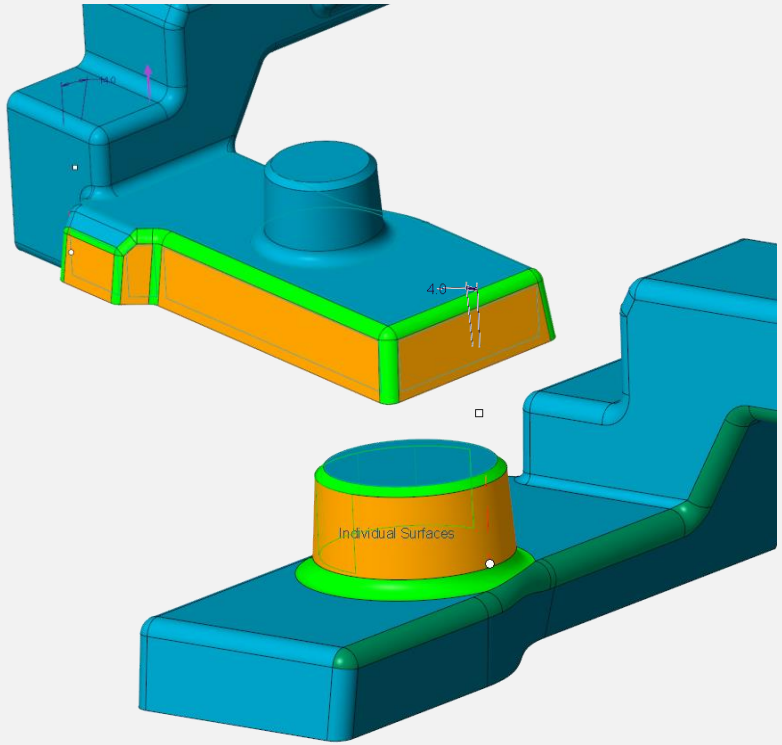

3D Sweep

- Create accurate 3D geometric representing parts machined with cutting tools

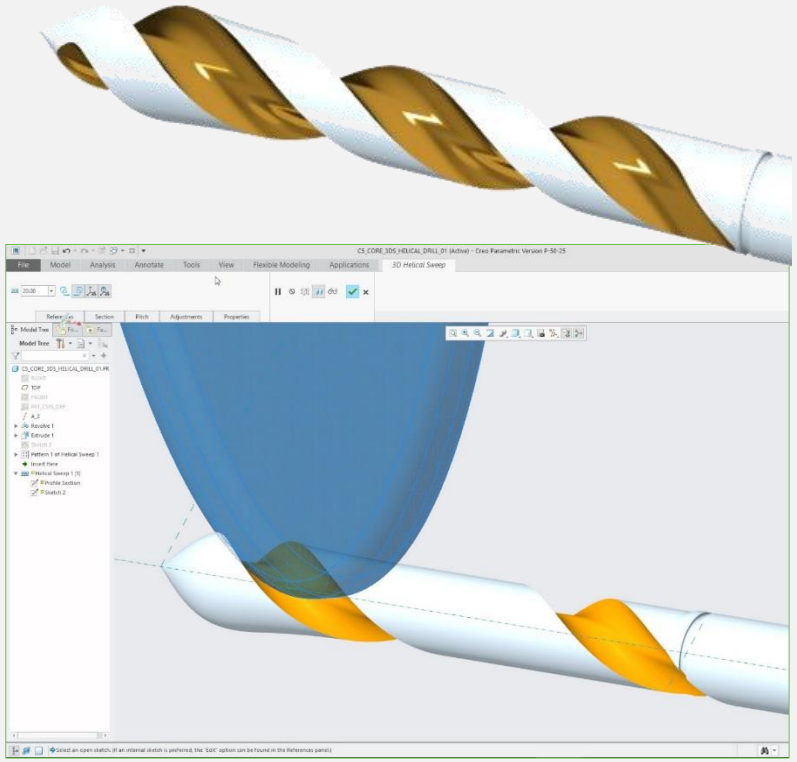

Close section Bend Relief

- Control the length of the bend relief
- Supported by Bend Relief Recognition

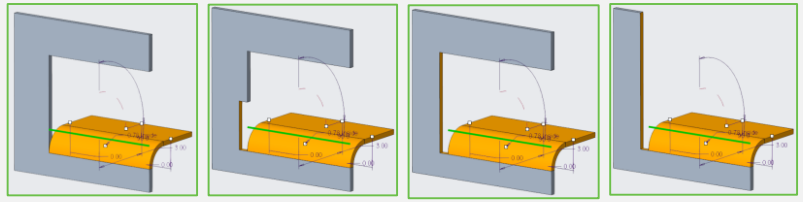

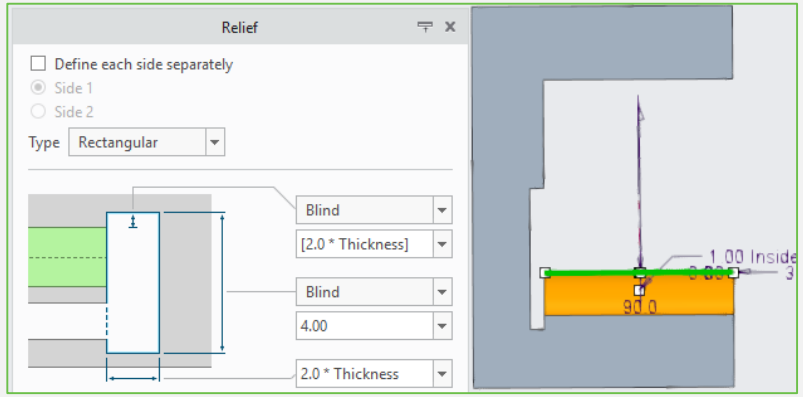

SHEETMETAL USABILITY ENHANCEMENTS

Round/Chamfer

- Control round/chamfer behavior of corner seams

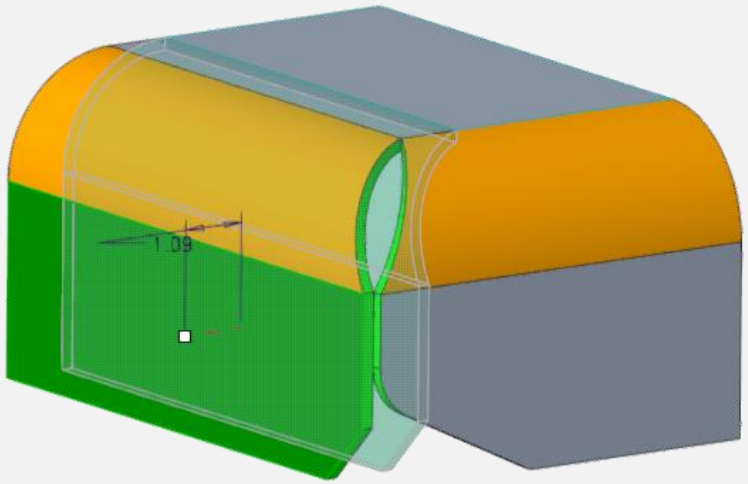

Flat Pattern Representation

- Easily create flat state simplified representation
- Easy switch from bent to flattened state

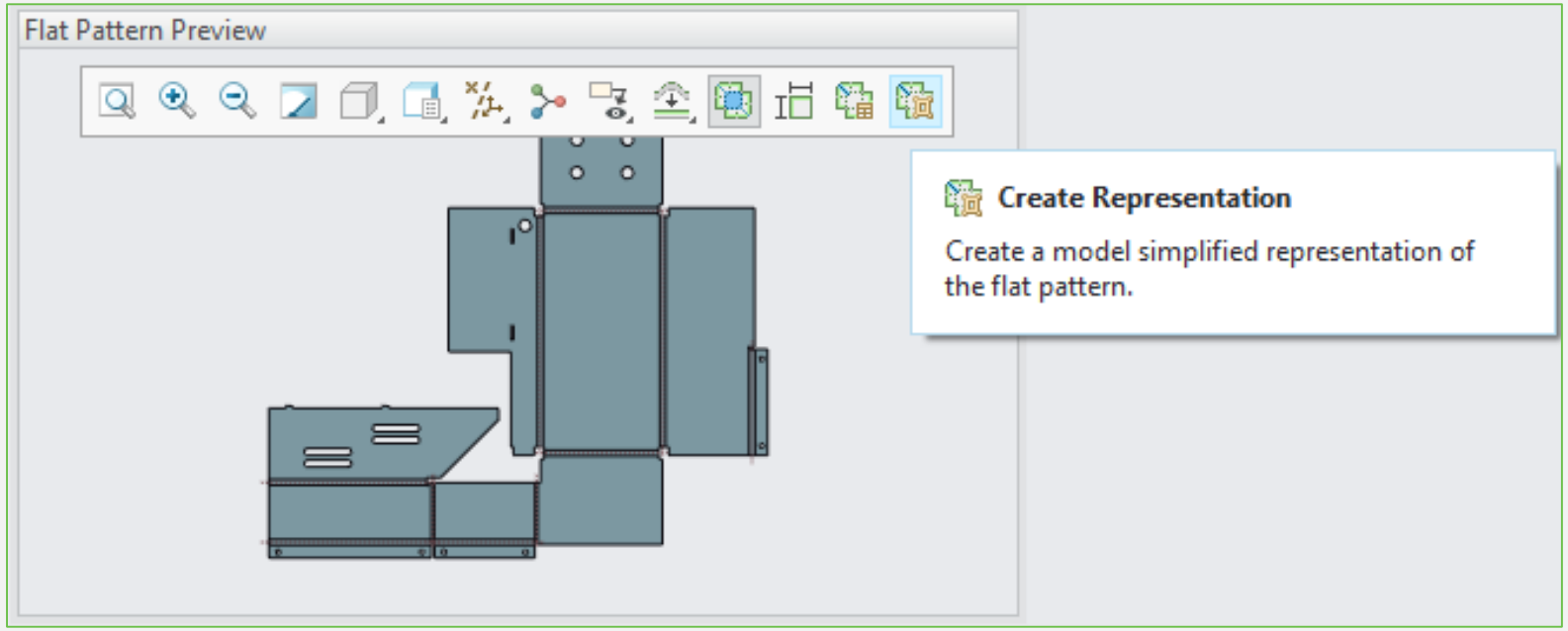

MODEL BASED ENTERPRISE

84%

of products from best-in-class manufacturers

achieve revenue, cost, launch and quality targets using model based engineering

- Aberdeen

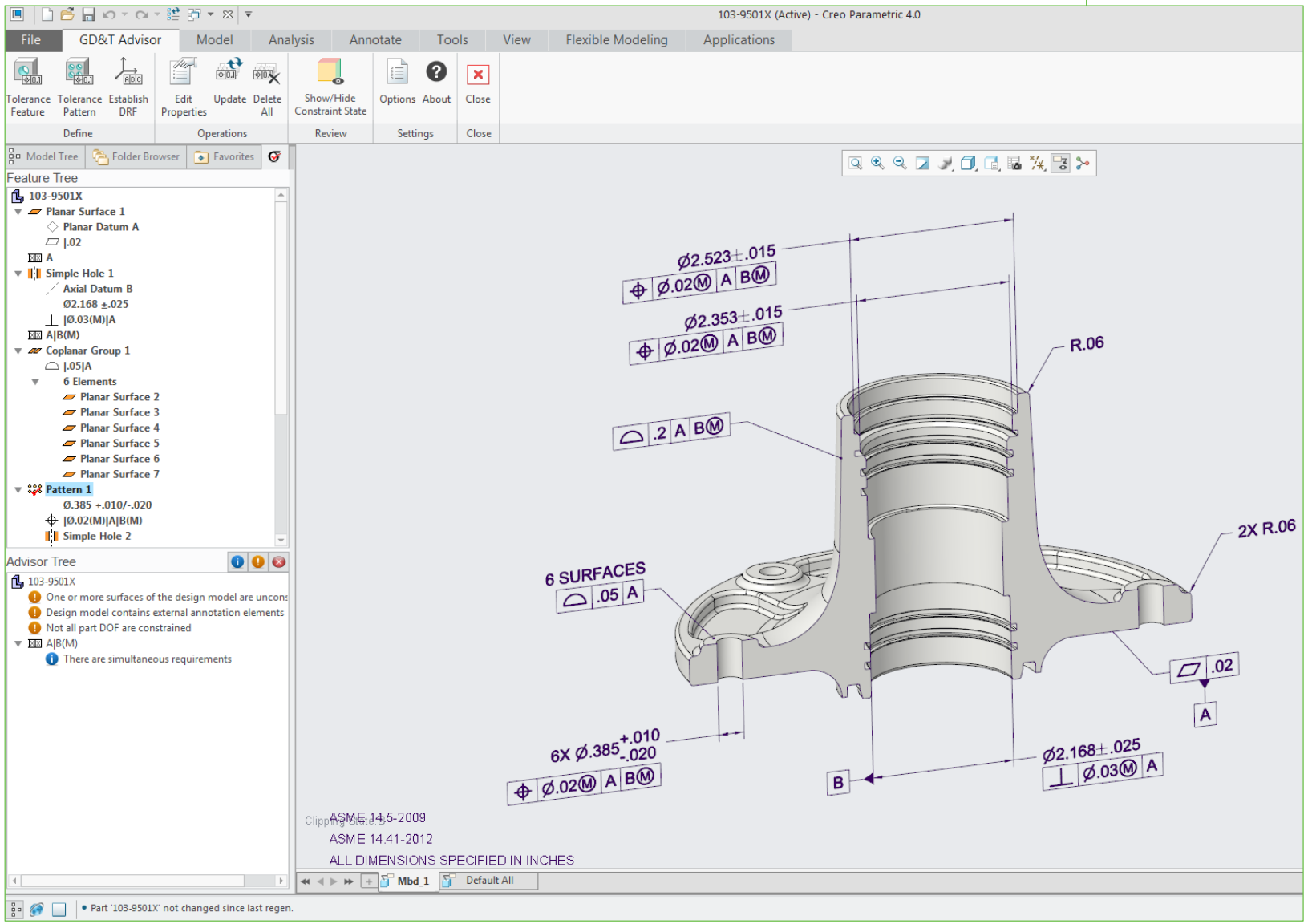

Standards support and Workflow

- ASME and ISO standard support
- Intelligent GD&T

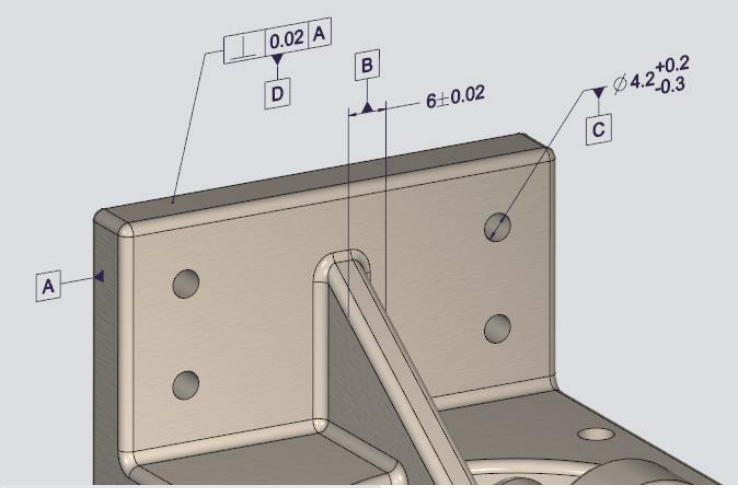

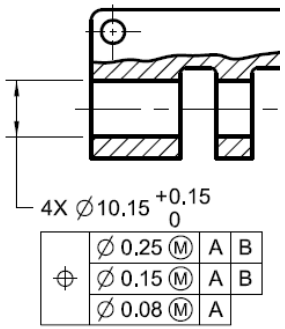

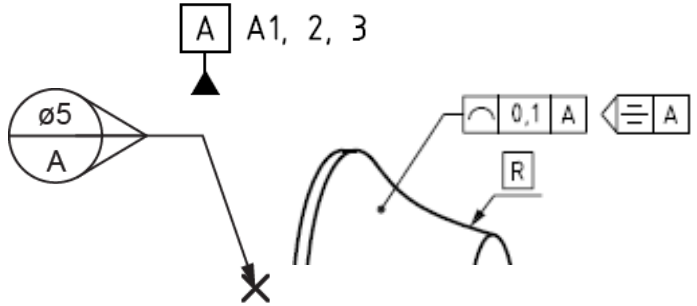

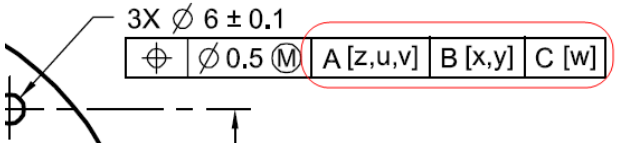

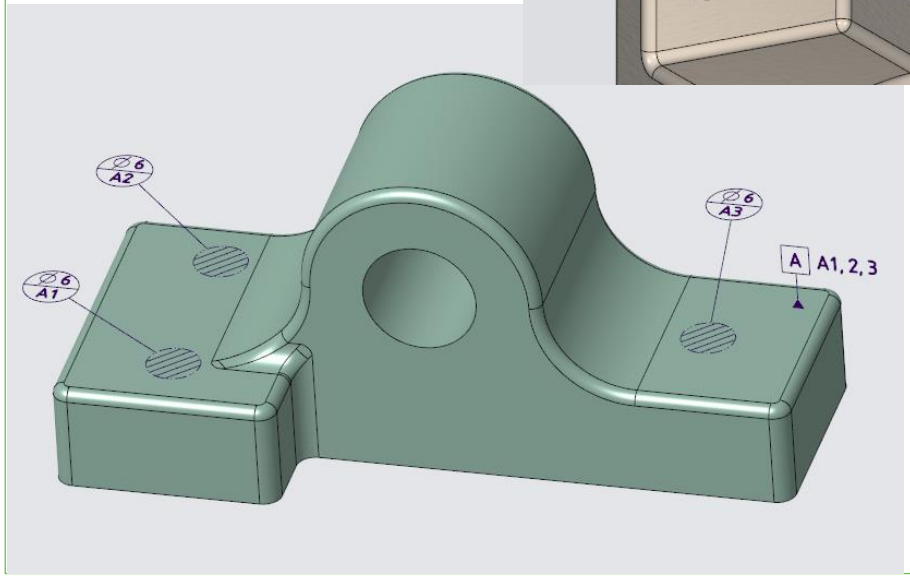

ASME Y14.5-2009
ASME Y14.41-2012

ISO 1101:2012
ISO 5459:2011
+ others…

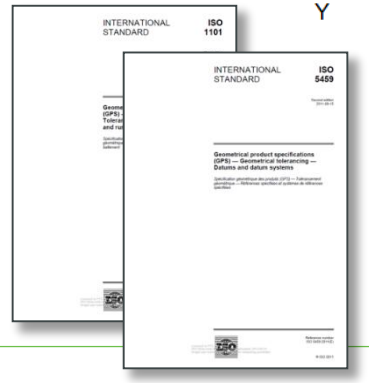

MBD ENHANCEMENTS IN **CREO 5.0**

Semantic Query

- Query models per ASME & ISO standards
  - Select annotation or model surfaces
  - Choose the desired level of information

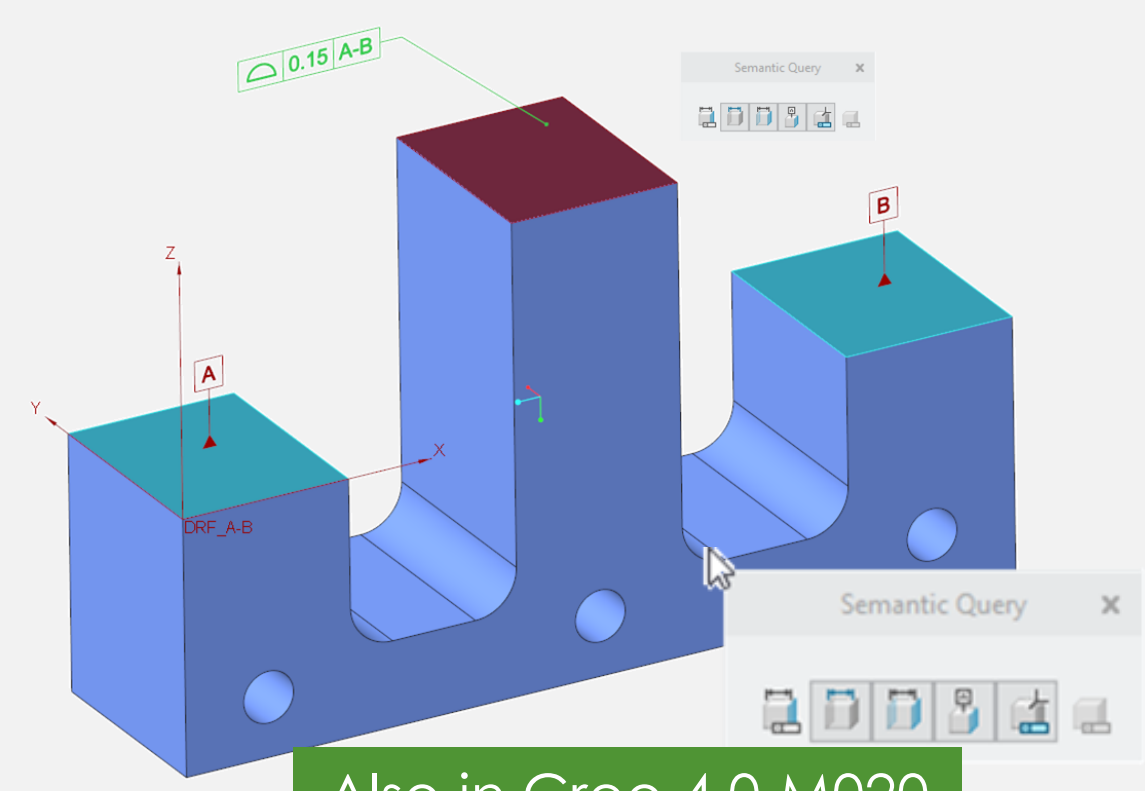

Also in Creo 4.0 M020

Analysis & Reuse of Existing Annotations

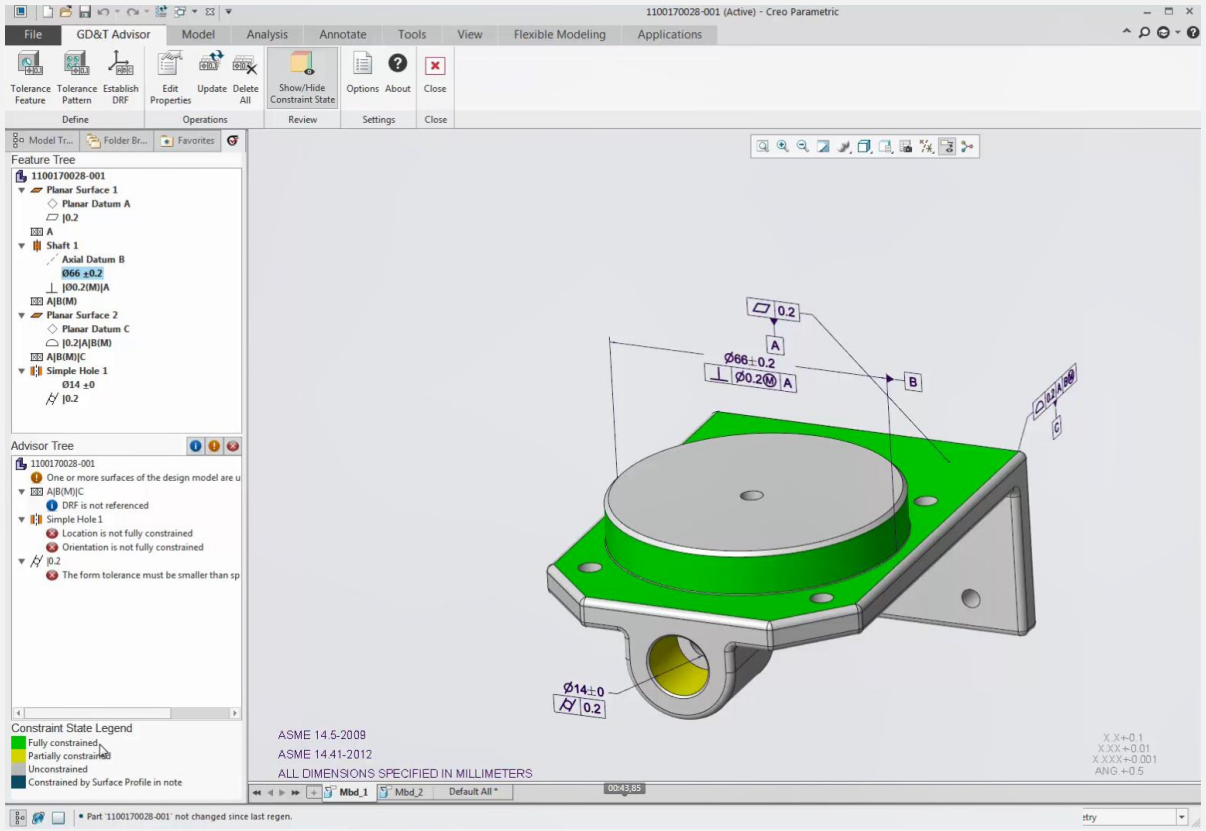

Also in Creo 4.0 M040

DESIGN FOR ADDITIVE MANUFACTURING

ptc

75%

of manufacturing operations worldwide will be using 3D-printed tools, jigs and fixtures made in-house or by a service bureau to produce finished goods by 2020

- Gartner

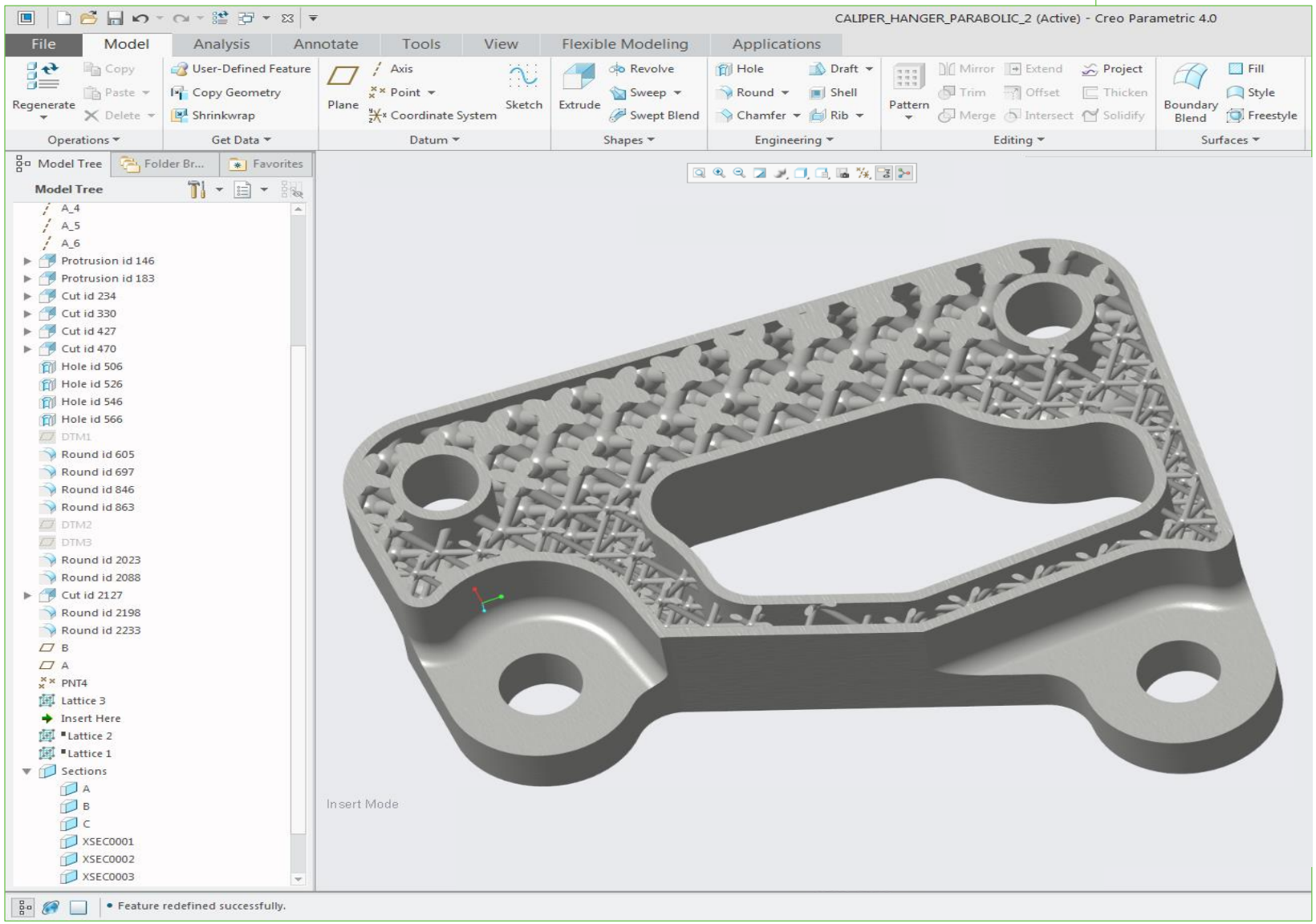

DESIGN FOR AM PROCESS CONSIDERATIONS

ptc

stratasys

materialise
innovators you can count on

i.materialise

3D SYSTEMS

VR&D

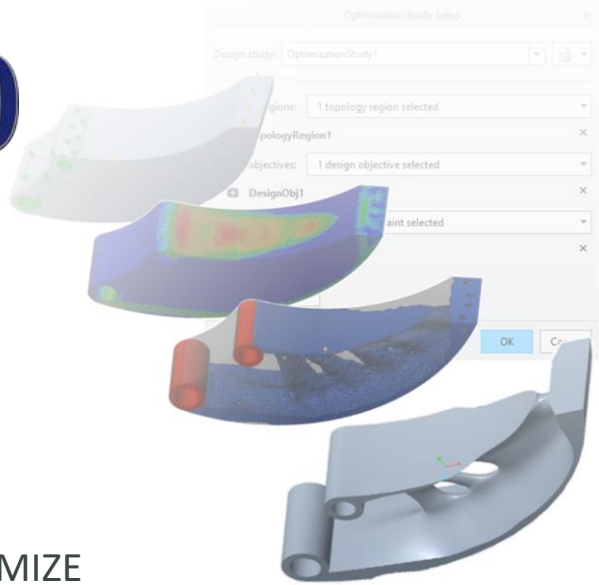

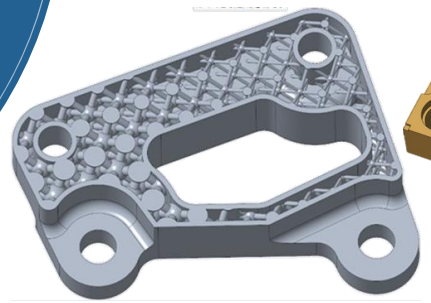

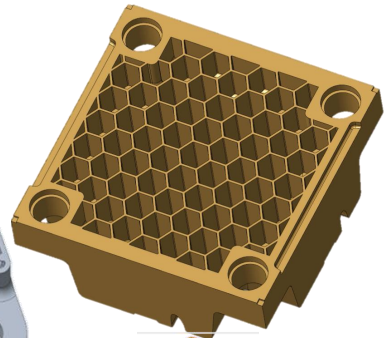

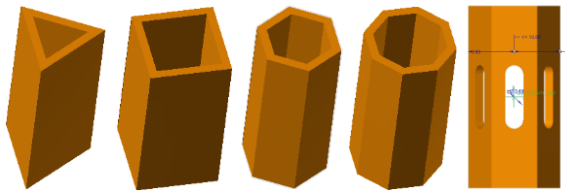

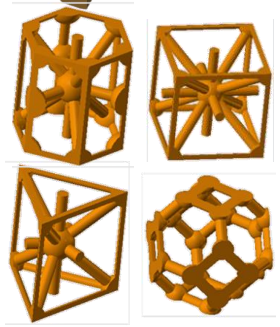

DESIGN FOR ADDITIVE MANUFACTURING

Creo Additive Manufacturing Extension

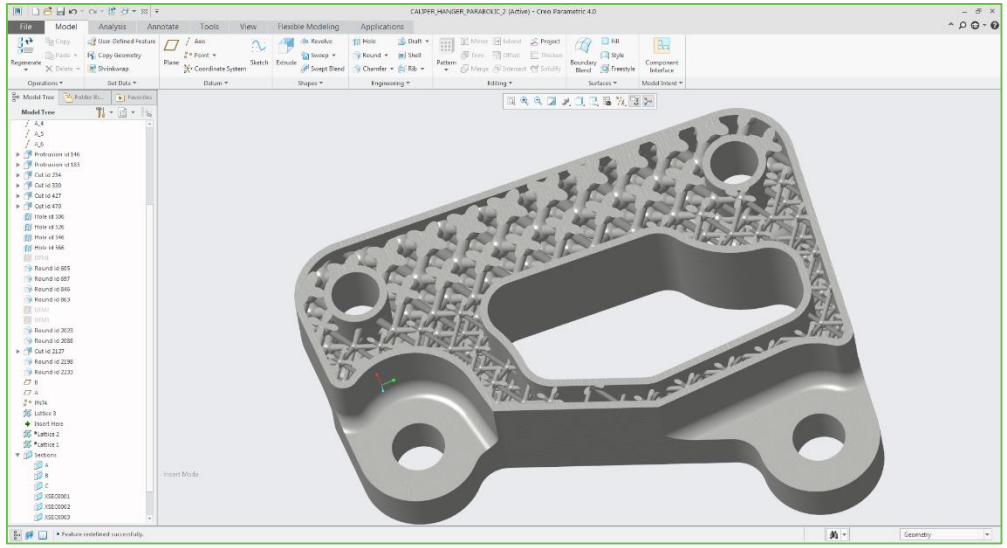

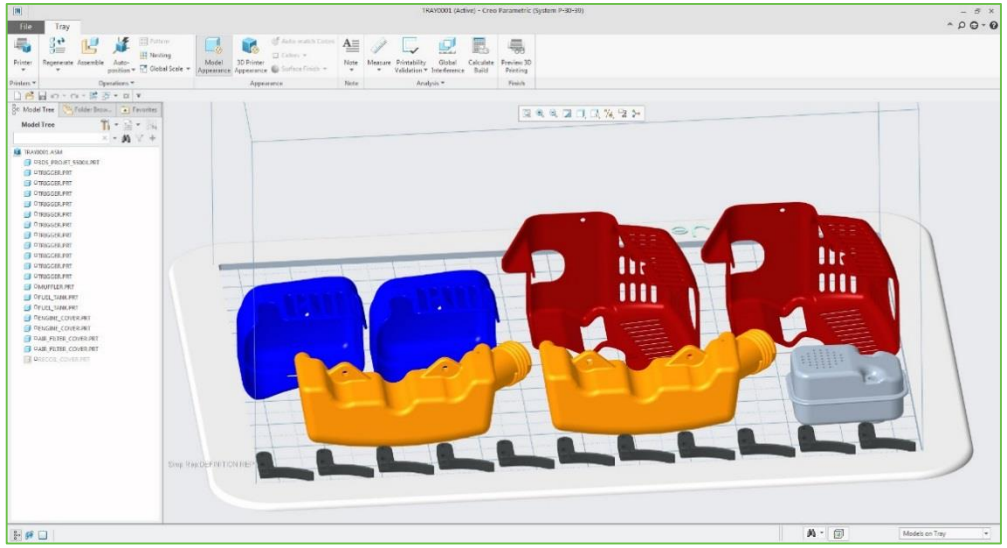

- **Create:** Build 2.5D and 3D parametric lattices
- **Analyze:** Quickly perform FEA using Creo Simulation
- **Optimize:** Refine lattice structures to meet your goals

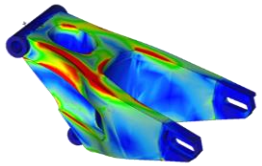

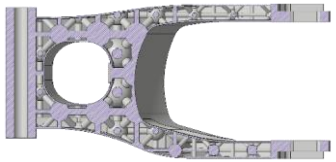

- **Print Tray Assemblies:** Ability to store, reuse and track print jobs

CREO 4.0 LATTICES

2.5D Lattice Structures

3D Lattice Structures

ADDITIVE CAPABILITIES IN CREO 4.0

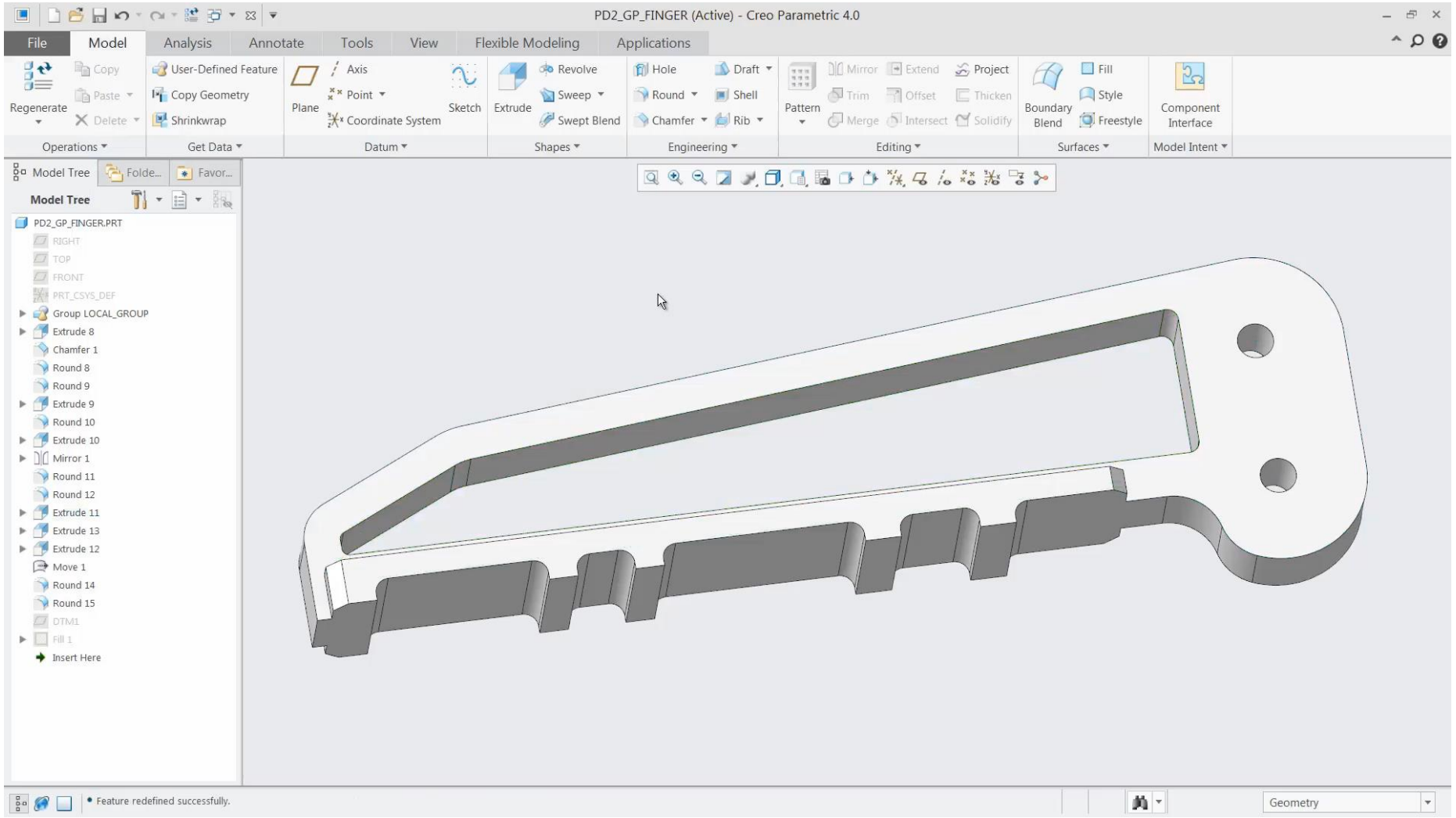

DESIGN FOR ADDITIVE MANUFACTURING

ptc

Engineering Product Performance

Race bike swingarm

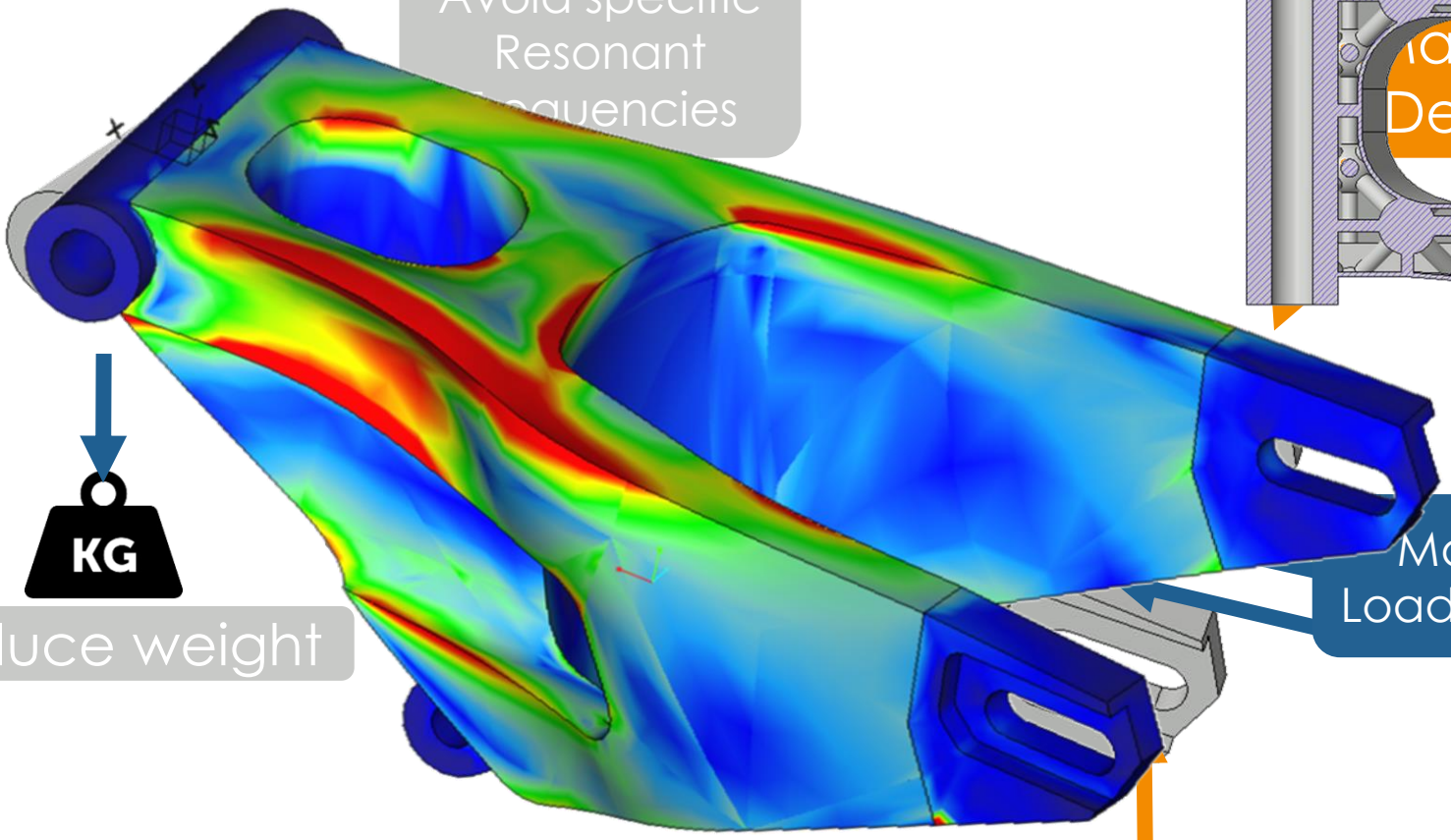

Reduce weight

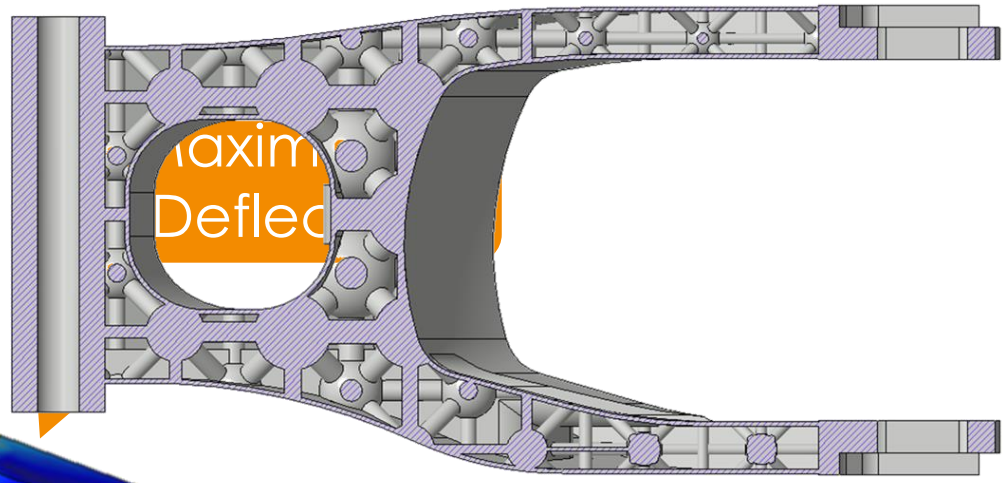

Maximum Load capacity

Maximum Y Deflection

CREO 5.0 INTEGRATED TOPOLOGY OPTIMIZATION

- Fully-integrated into Creo
- Results in parametric geometry – NOT tessellated surfaces
- Use structural, modal and thermal analysis
- Drive optimization against multiple objectives simultaneously

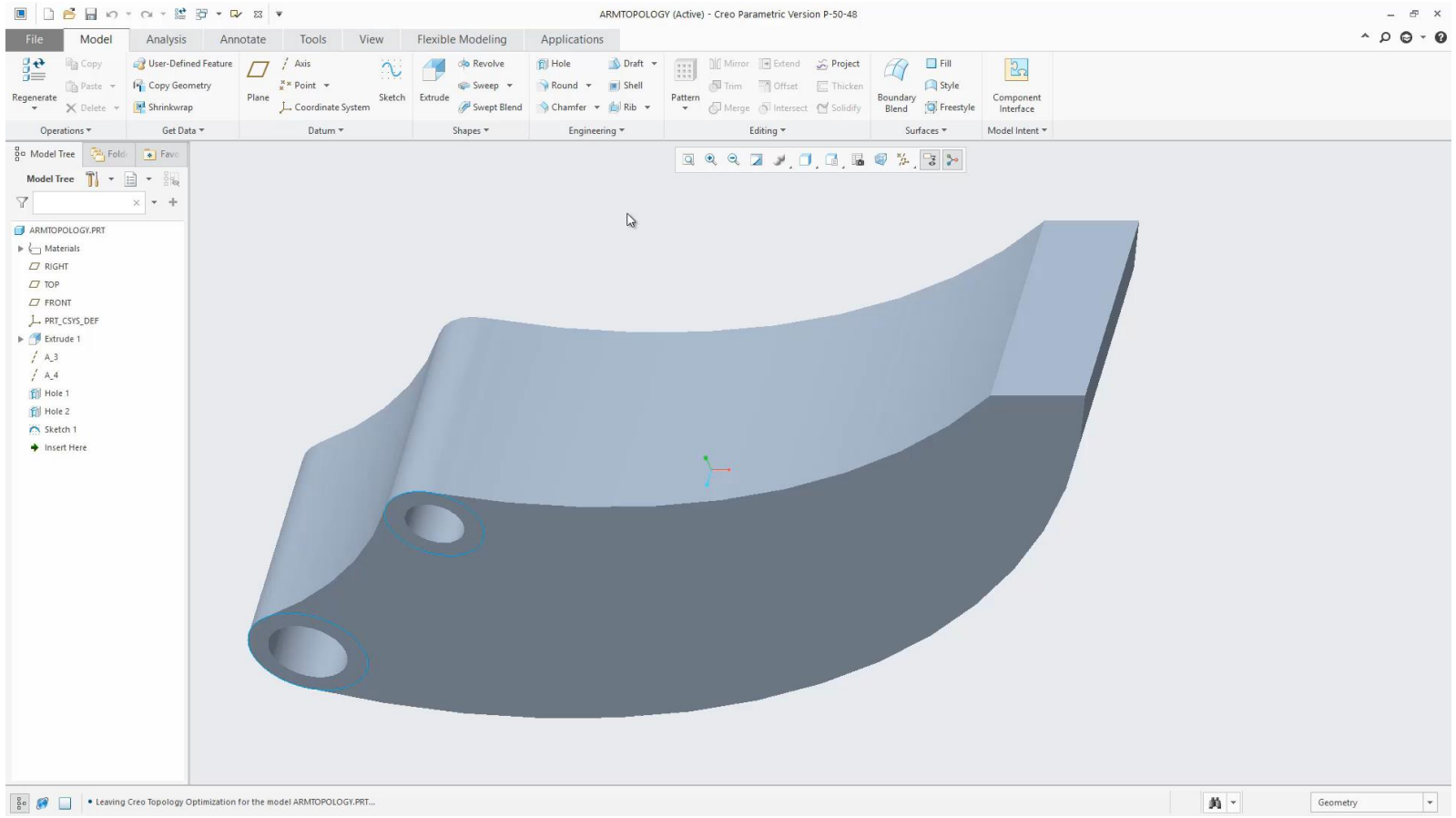

DESIGN FOR ADDITIVE MANUFACTURING

Enhanced Printability Checking

- Direct connection to 3D printers – understanding material usage and build time

stratasys

3D SYSTEMS

- Providing complete 3D Print checking without leaving Creo
- Manage print drivers and profiles
  NEW! in Creo 5.0

materialise

- Connection to online print bureaus

i.materialise

3D SYSTEMS
On Demand Manufacturing

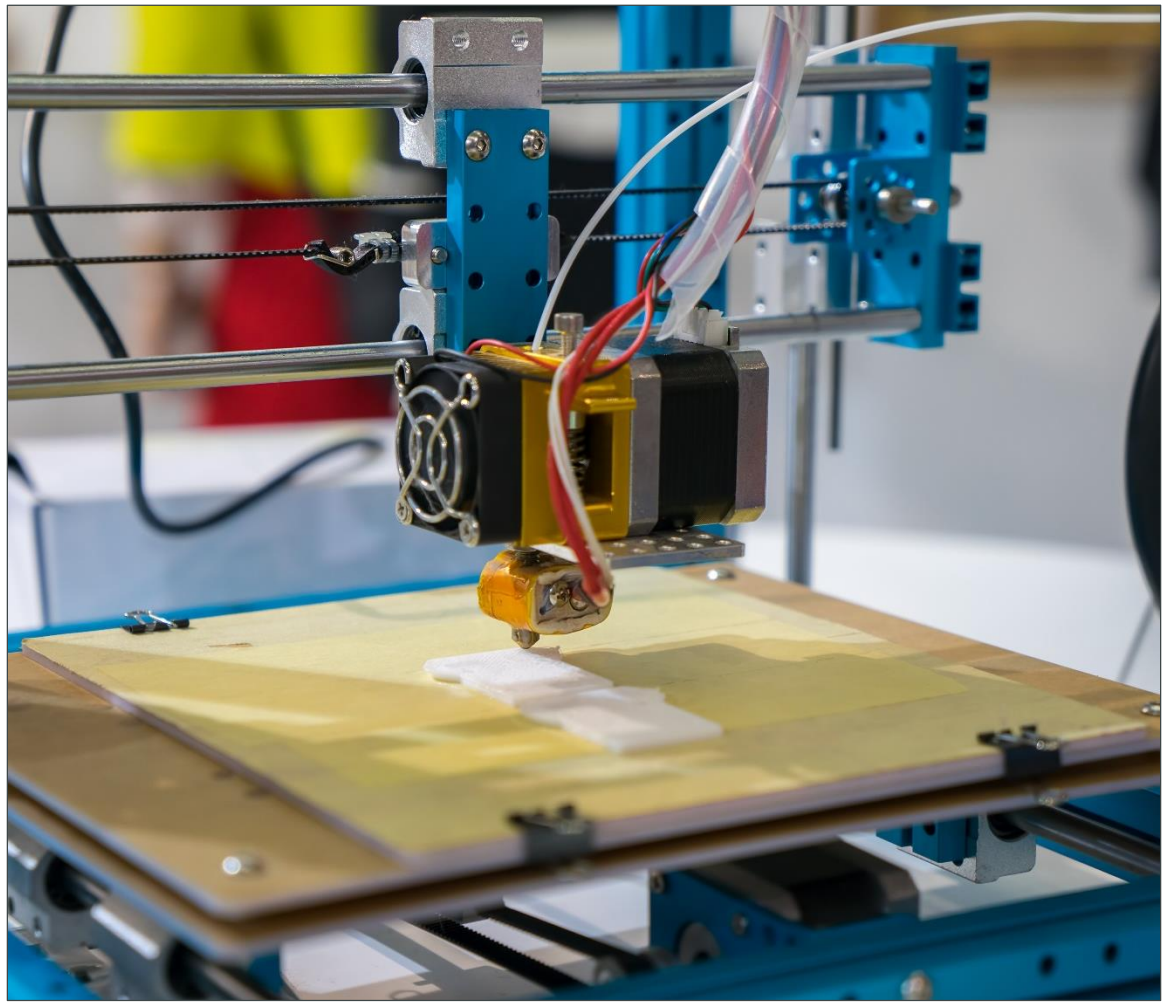

ENHANCED PRINTABILITY CHECKING AND PREP WITH MATERIALISE

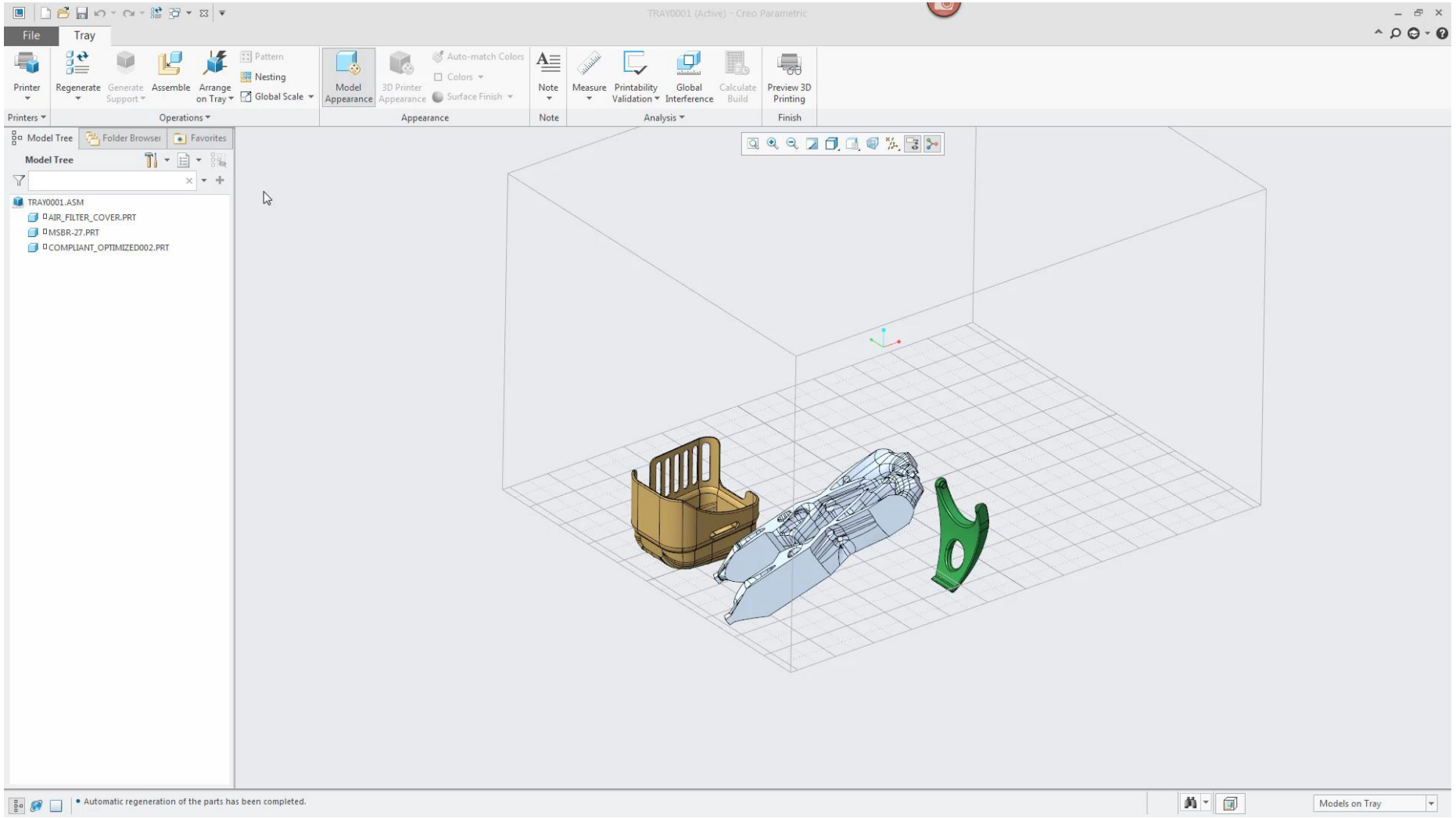

AUGMENTED REALITY

ptc

80%

of use cases that require human-to-machine interactions will use immersive interfaces by 2030

- Gartner

INTEGRATED AUGMENTED REALITY IN CREO

Benefits

- Experience the Product in the Physical World at 1:1 Size and Scale
- Improve Design Review Effectiveness
- Enhance Sales and Marketing Engagements
- Share IP Securely

CREO AR DESIGN SHARE*

Fully control authoring and accessibility of your company's AR experiences

- **CAPABILITIES**
  - Create and manage AR experiences
    - Publish more than the 5 AR experiences available for free
    - AR experiences have a permanent shelf life (vs. 6 months in free)
  - Administrative control
    - Add and remove authors & viewers
    - Add and delete models (AR Experiences)

- **KEY BENEFITS**
  - Ensure that only those you choose have access to AR experiences
  - Protect IP by preventing access to CAD data
  - Engage a wider range of stakeholders

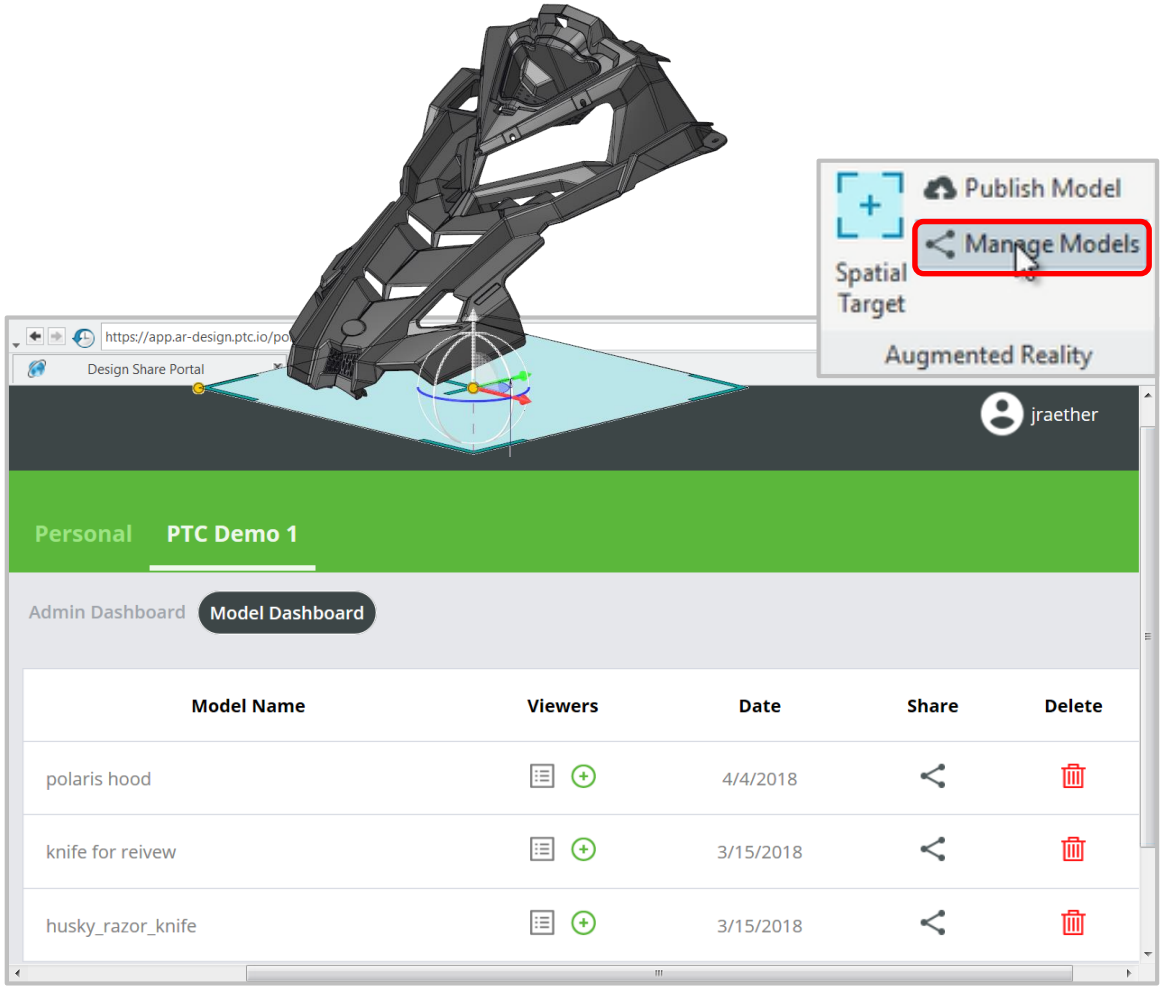

**Available in Individual or Enterprise packages to best meet your needs*

CREO AR DESIGN SHARE

Benefits

- Control and manage access to AR experiences
- Maintain a larger library of experiences
- Manage experience access by contact

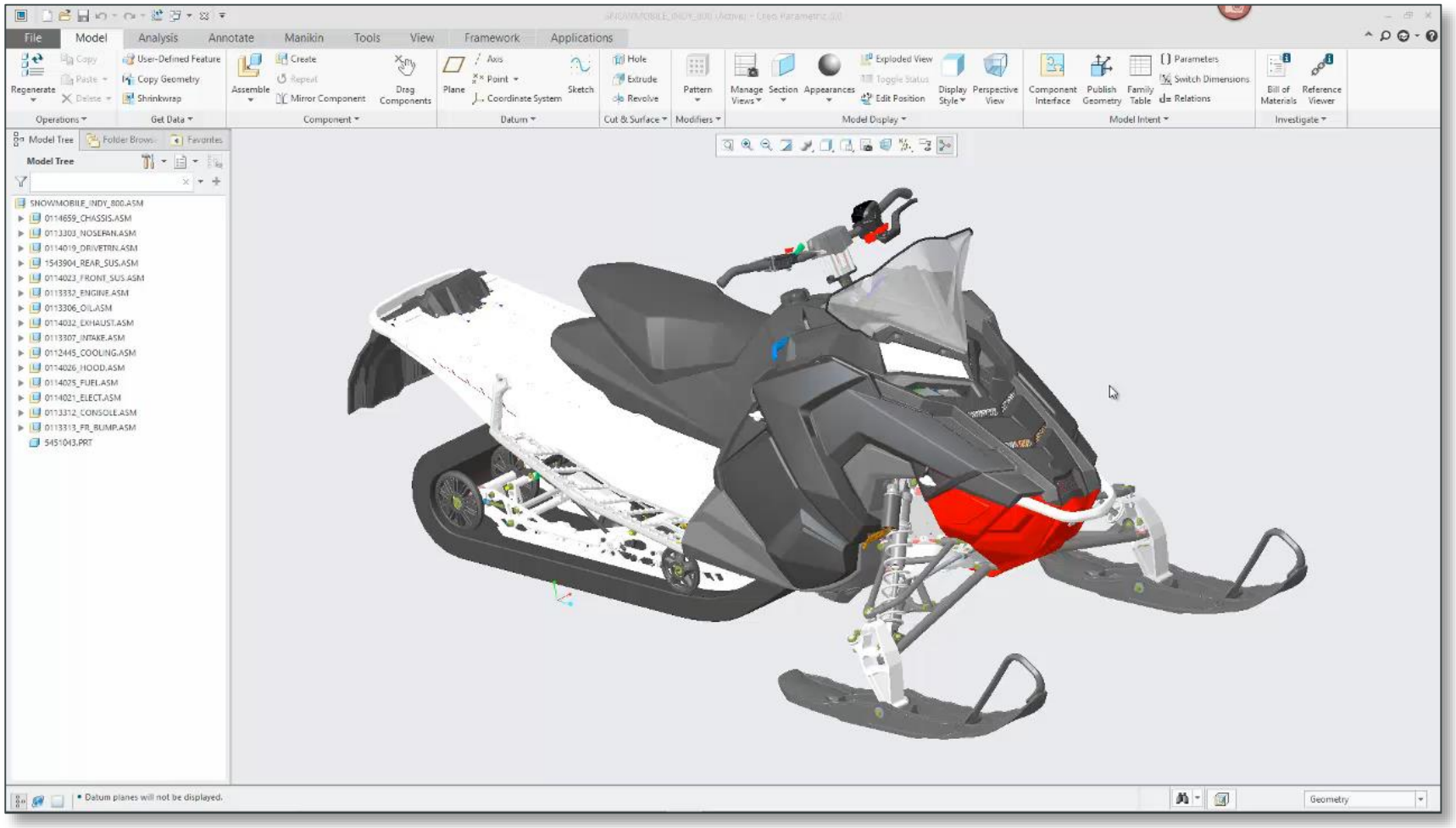

ANSYS PARTNERSHIP

PTC/ANSYS PARTNERSHIP ANNOUNCEMENT

Revolutionize product design by removing the barriers between CAD and CAE

Partnership provides best and broadest portfolio of engineering simulation software

Leader in 3D CAD over 30 years

Leader in Engineering Simulation for over 48 years

PTC and ANSYS will put the power of gold-standard simulation at the fingertips of the Design Engineer

CREO SIMULATION LIVE - OVERVIEW

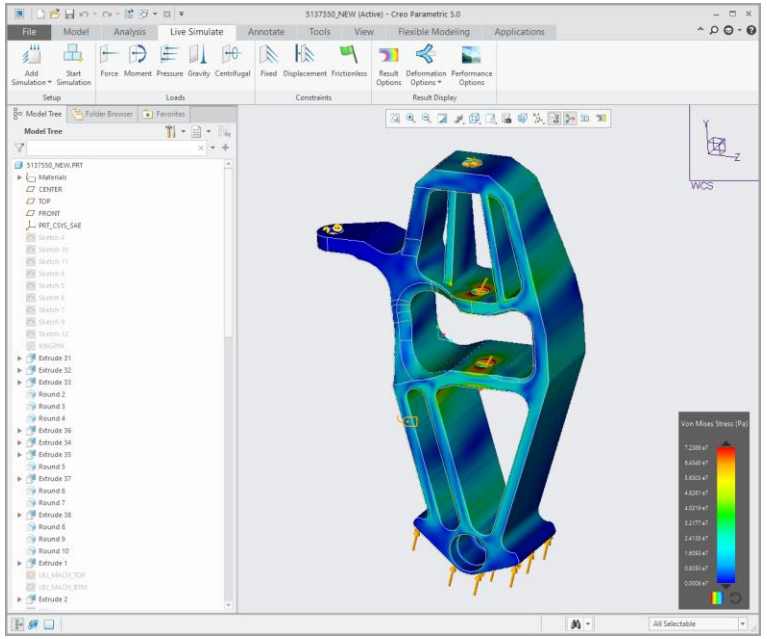

Features:

- **Speed** – Instantaneous simulation experience
- **Ease of use** – Run 1st simulation in minutes.
- **Geometry enabled** – Easily edit or create features while the analysis is running
- **Interactive** – Analysis results update dynamically as user makes geometry modification

Technology:

- Massively parallel solvers & post-processing on GPUs
- 50 years captured experience in methods & numerics by ANSYS

Benefits:

- Quickly create & test multiple design variations
- Minimal learning curve
- Negligible setup time (no meshing/time step) choices
- Robust - no failed simulations
- Unlocks rapid concept exploration

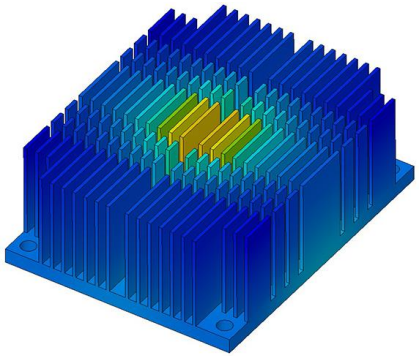

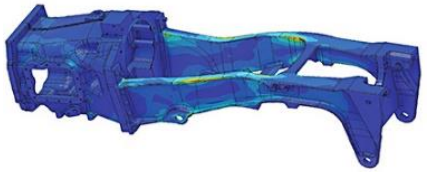

CREO SIMULATION LIVE IN ACTION

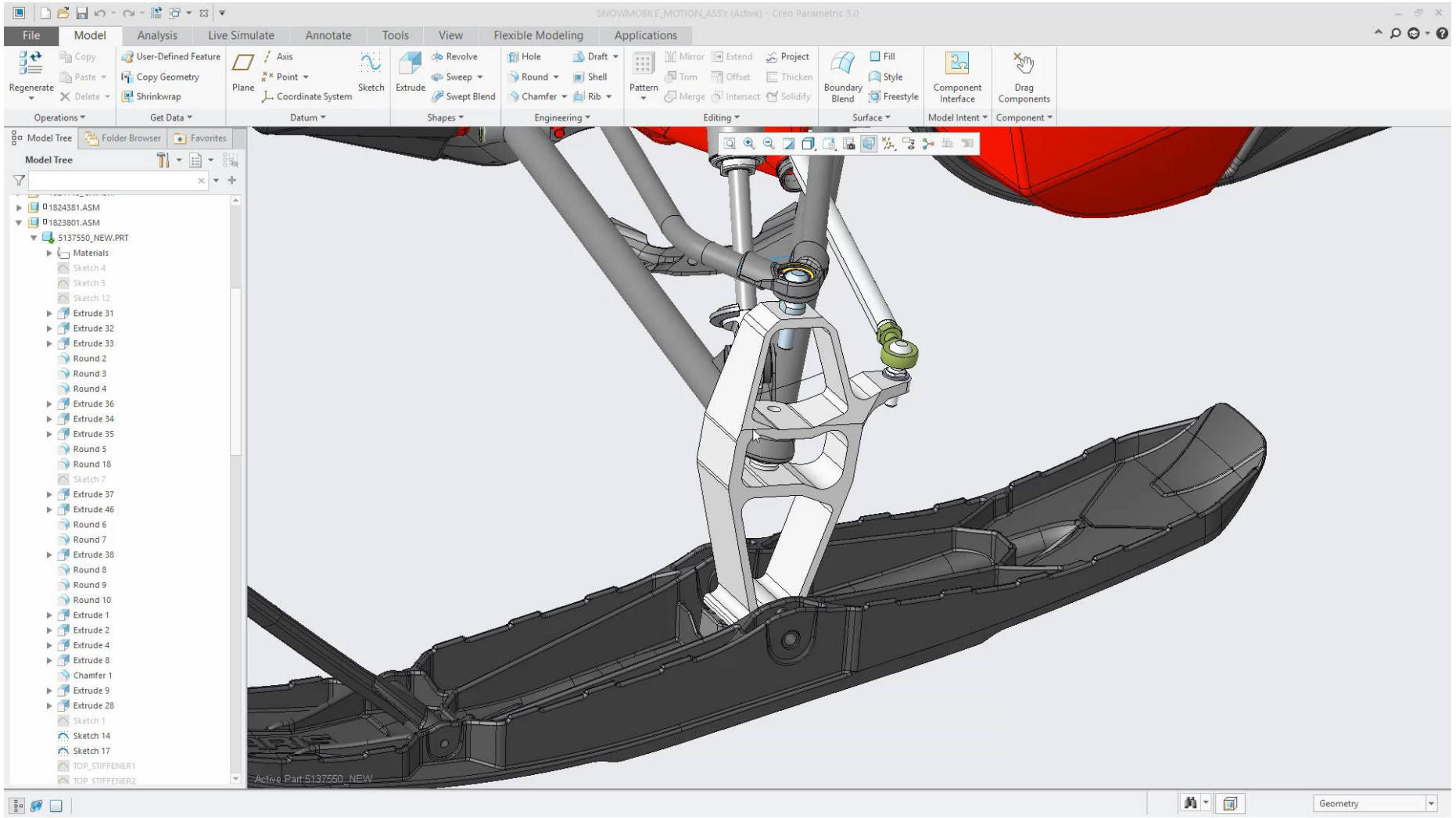

DESIGN FOR CONNECTIVITY

70%

of global discrete manufacturers will **offer connected products** by 2017, increasing the need for embedded software, systems engineering, and a product innovation platform

- IDC

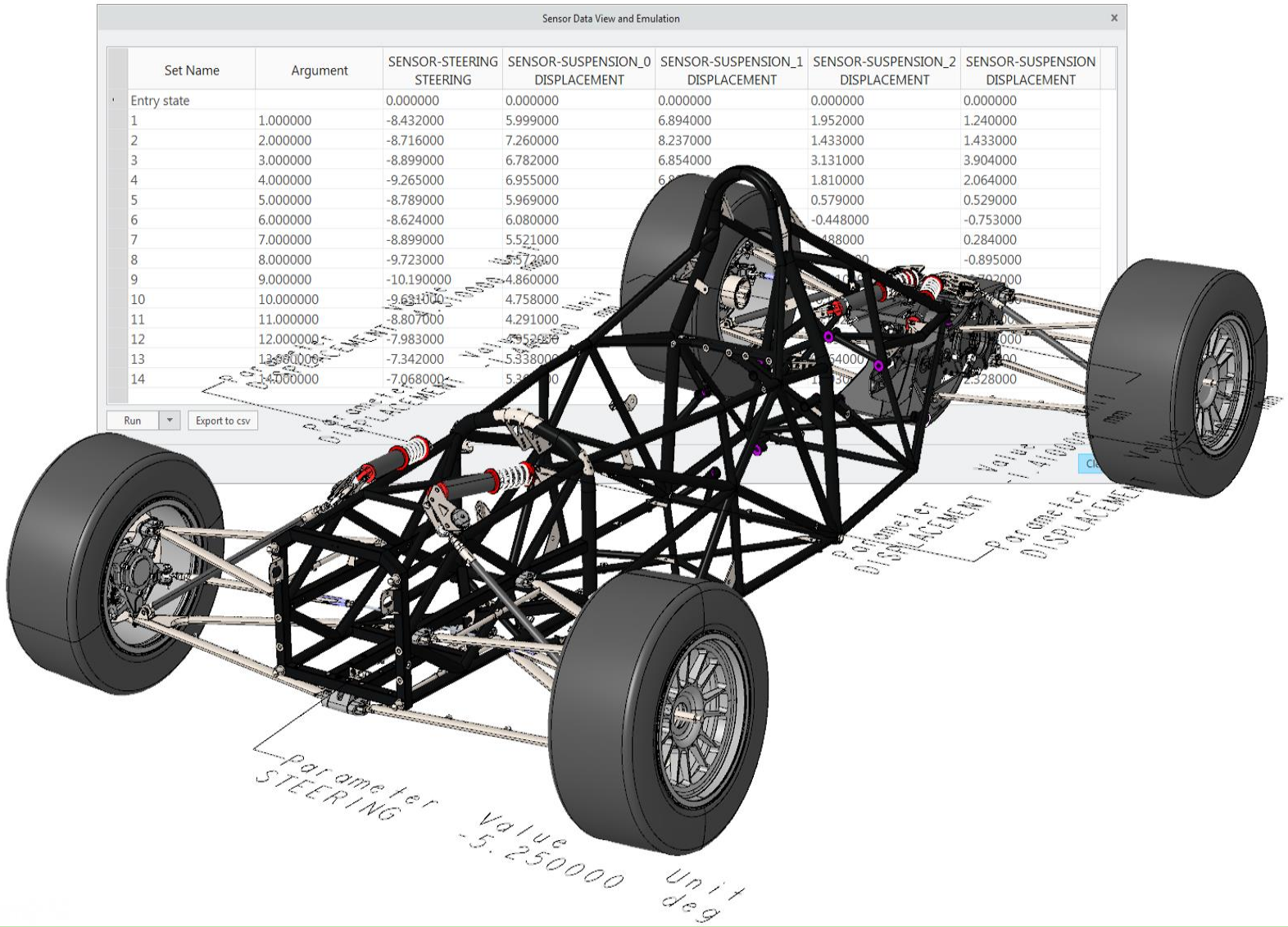

Set Name	Argument	SENSOR-STEERING STEERING	SENSOR-SUSPENSION_0 DISPLACEMENT	SENSOR-SUSPENSION_1 DISPLACEMENT	SENSOR-SUSPENSION_2 DISPLACEMENT	SENSOR-SUSPENSION DISPLACEMENT
Entry state		0.000000	0.000000	0.000000	0.000000	0.000000
1	1.000000	-8.432000	5.999000	6.894000	1.952000	1.240000
2	2.000000	-8.716000	7.260000	8.237000	1.433000	1.433000
3	3.000000	-8.899000	6.782000	6.854000	3.131000	3.904000
4	4.000000	-9.265000	6.955000	[illegible]	1.810000	2.064000
5	5.000000	-8.789000	5.969000	[illegible]	0.579000	0.529000
6	6.000000	-8.624000	6.080000	[illegible]	-0.448000	-0.753000
7	7.000000	-8.899000	5.521000	[illegible]	[illegible]488000	0.284000
8	8.000000	-9.723000	5.572000	[illegible]	[illegible]	-0.895000
9	9.000000	-10.190000	4.860000	[illegible]	[illegible]	[illegible]000
10	10.000000	-9.631000	4.758000	[illegible]	[illegible]	[illegible]
11	11.000000	-8.807000	4.291000	[illegible]	[illegible]	[illegible]
12	12.000000	-7.983000	4.952000	[illegible]	[illegible]	[illegible]000
13	13.000000	-7.342000	5.338000	[illegible]	[illegible]54000	[illegible]
14	14.000000	-7.068000	5.3[illegible]0	[illegible]	[illegible]	2.328000

PHYSICAL AND DIGITAL WORLDS

Manufacturing and Service

Physical Product

Existing Data Streams from Deployed Products can have Limited Value in Smart, Connected Ops or Service

CONFIDENTIAL FORWARD LOOKING INFORMATION SUBJECTED TO CHANGE WITHOUT NOTICE © PTC INC 2016

PHYSICAL AND DIGITAL WORLDS

Digital Prototype

Physical Product

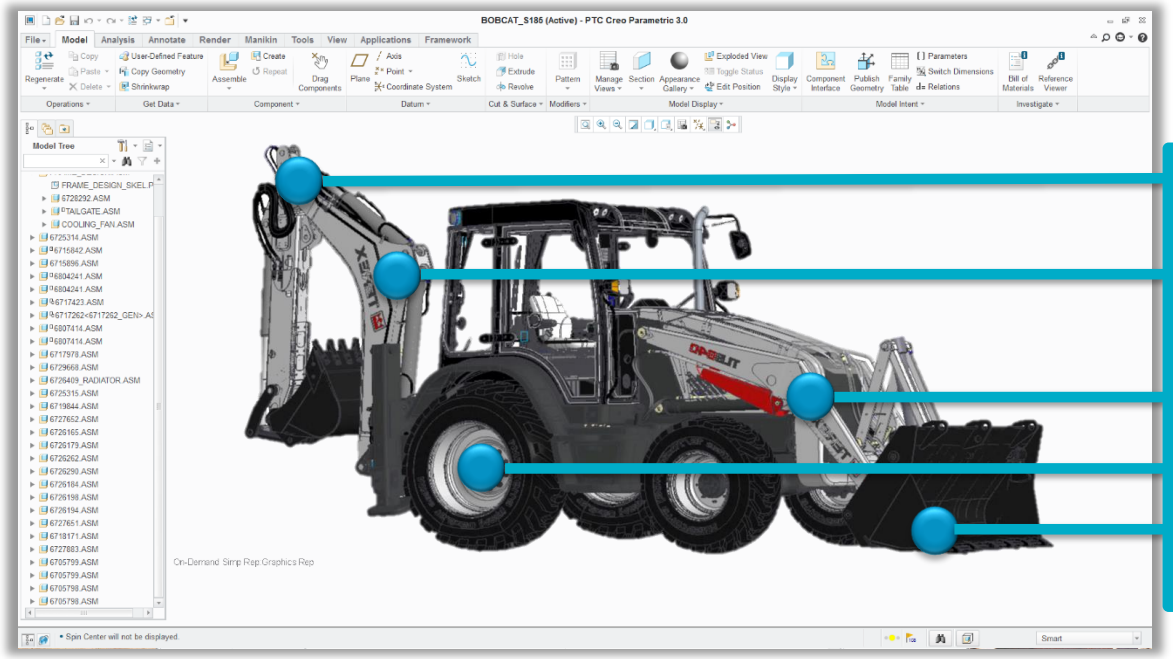

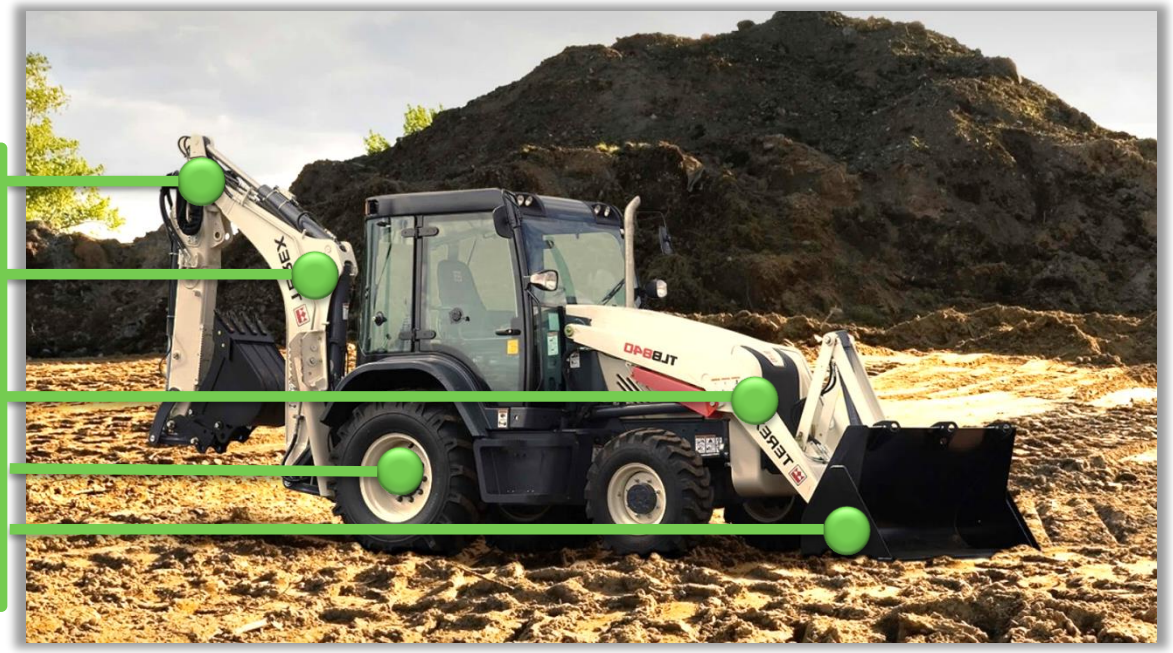

Design for Connectivity to Drive Outcomes for Service, Manufacturing, and Engineering!

CONFIDENTIAL FORWARD LOOKING INFORMATION SUBJECTED TO CHANGE WITHOUT NOTICE © PTC INC 2016

PHYSICAL AND DIGITAL WORLDS

Digital Twin	Digital Twin	Physical Product

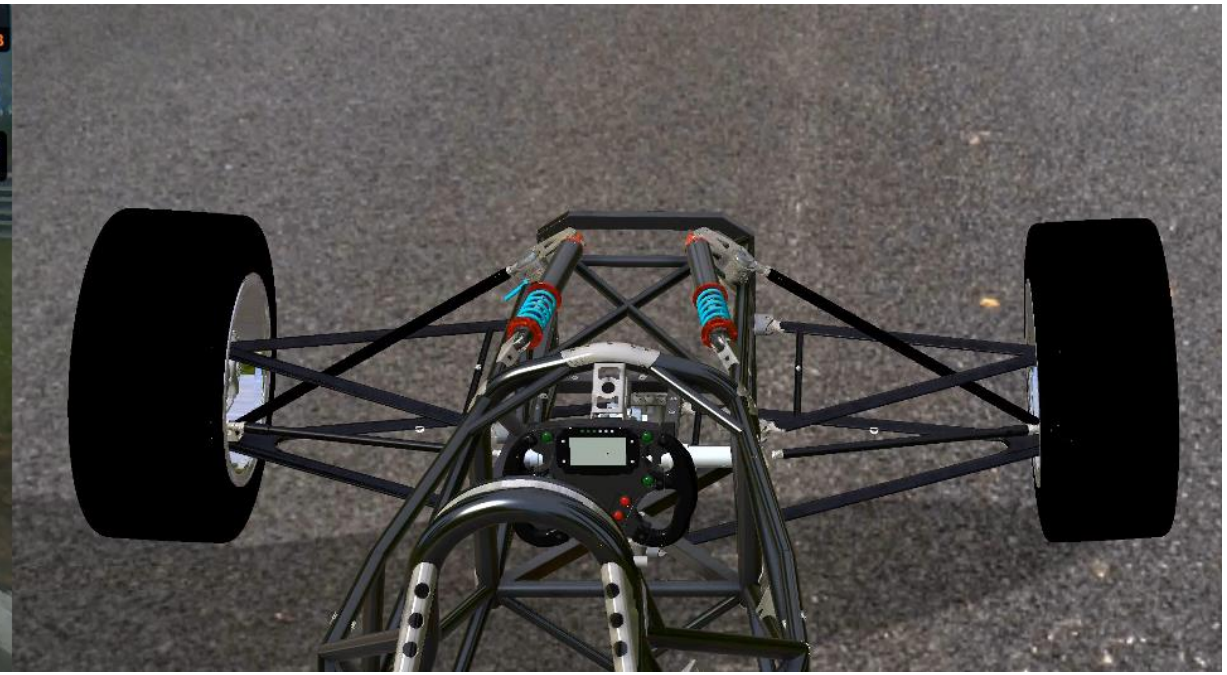

Digital Twin: A digital representation of a unique occurrence of a physical product, used to gain greater insight into that product's state, performance and behavior.

CREO PRODUCT INSIGHT

Replace Assumptions with Facts

Optimize products to real world conditions

- Build sensors in your models that connect to sensors in the real world
- Using real world data to run simulations in Creo

Create Virtual Sensors

Use real world information with Creo to calculate data that can not be measured (i.e. Center of Gravity)

Build out correct data streams

Share Results via ThingWorx

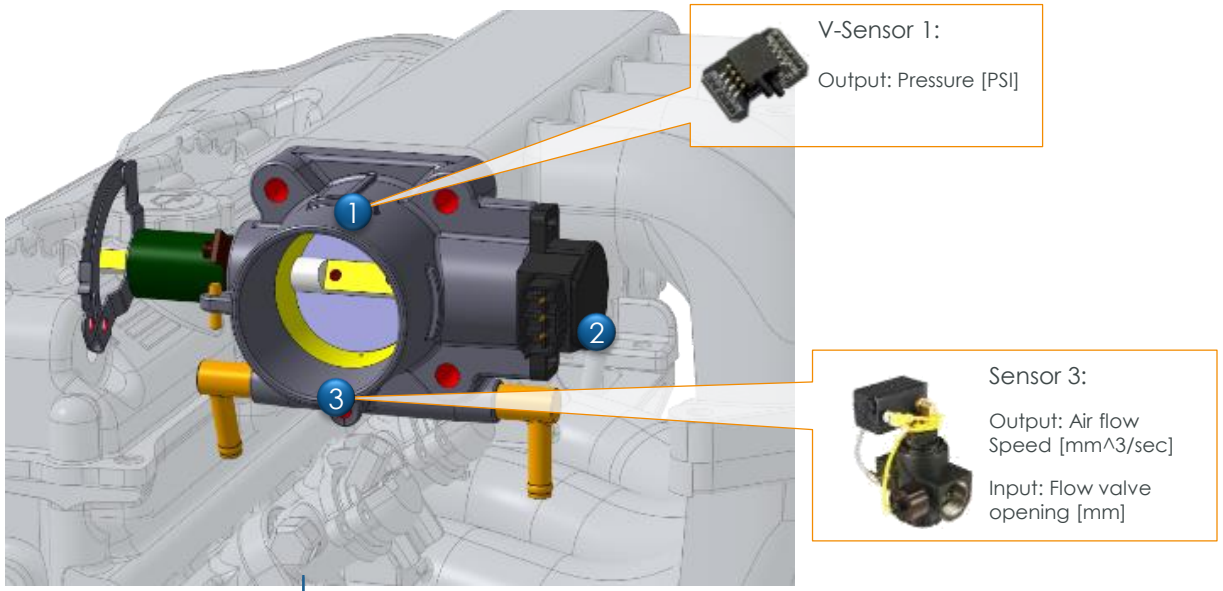

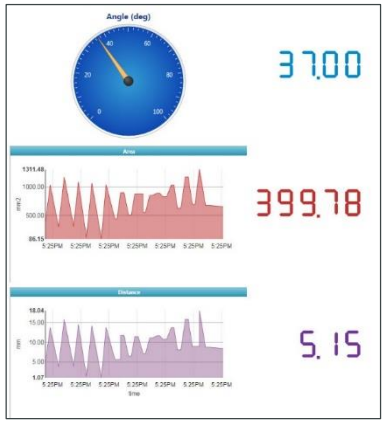

Tamir Plachinsky, CEO, Griiip: "We see huge value in the ability of Creo Product Insight to give our engineers real data from the track to enhance our design process."

VIRTUAL SENSING

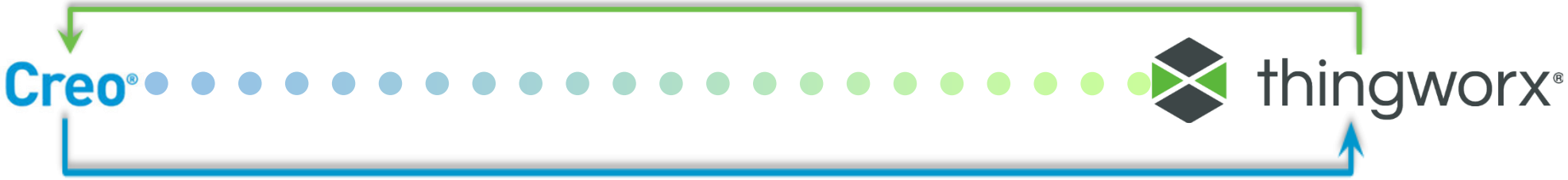

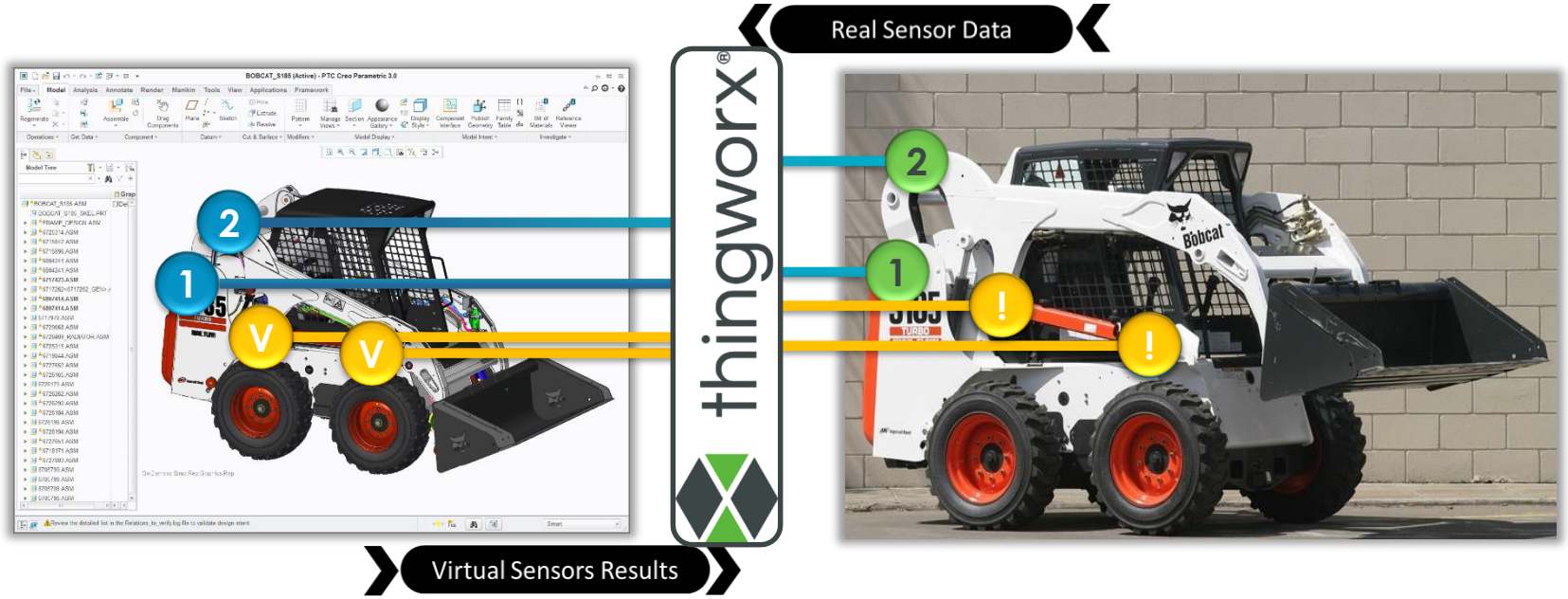

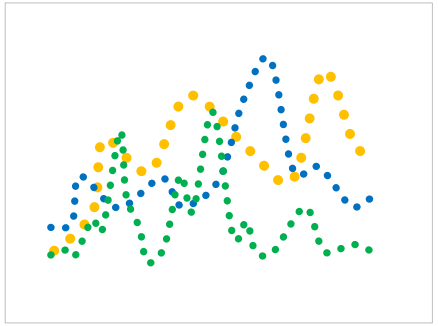

VIRTUAL SENSING

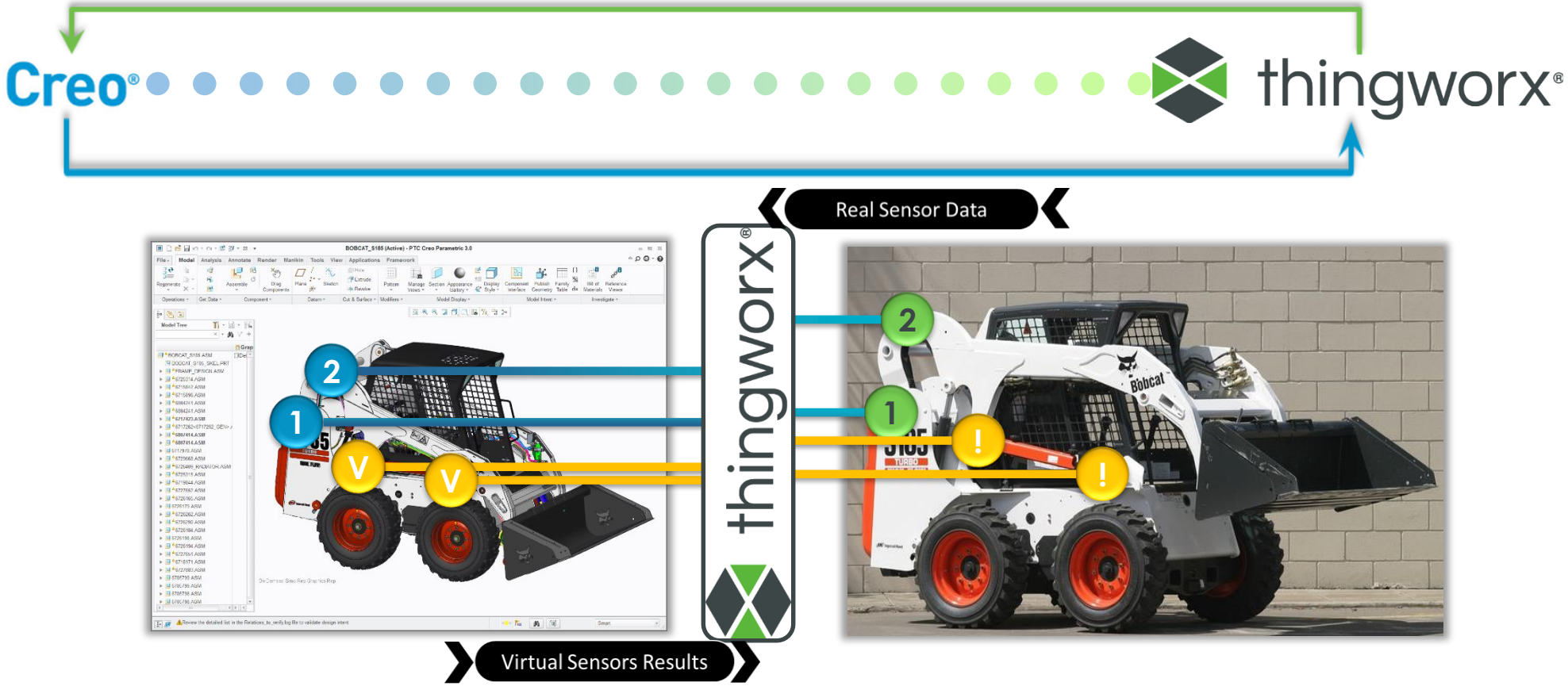

Automated (background) CAD analysis

- Physical sensors update Digital Twin to exact state
- Virtual measures as outputs of Virtual Sensors

CONFIDENTIAL FORWARD-LOOKING INFORMATION SUBJECTED TO CHANGE WITHOUT NOTICE © PTC INC 2016

CREO ANALYSIS SERVICES

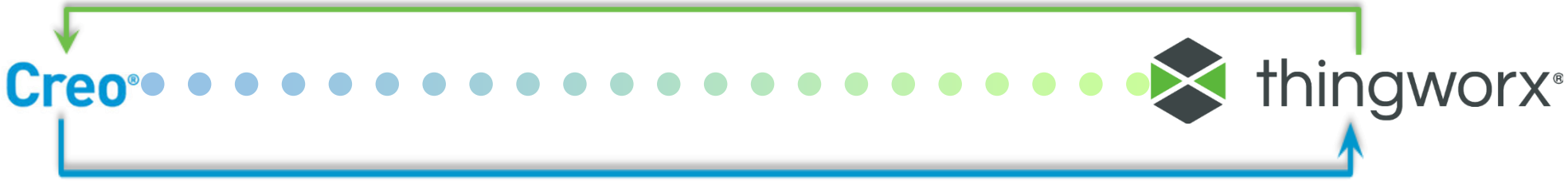

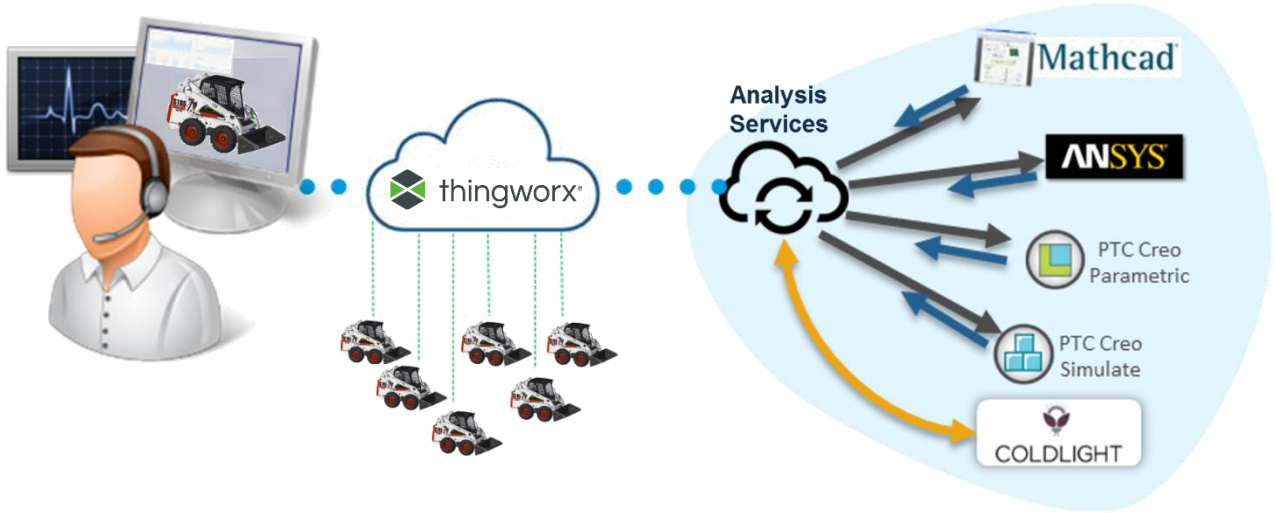

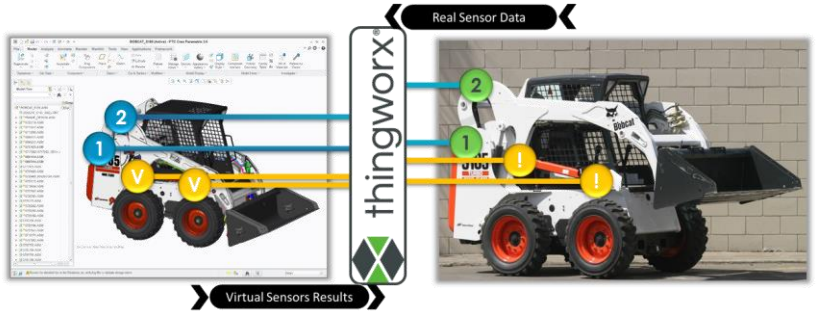

Creo Analysis Services

- Setup simulations for automated execution
- Run simulations with automatically sensor inputs
- Obtain additional product insight through Virtual Sensing

CONFIDENTIAL FORWARD LOOKING INFORMATION SUBJECTED TO CHANGE WITHOUT NOTICE © PTC INC 2016

INTEGRATED COMPUTATIONAL FLUID DYNAMICS

Best in class manufacturers are

71%

more likely to use virtual prototypes to evaluate product performance.

- Aberdeen

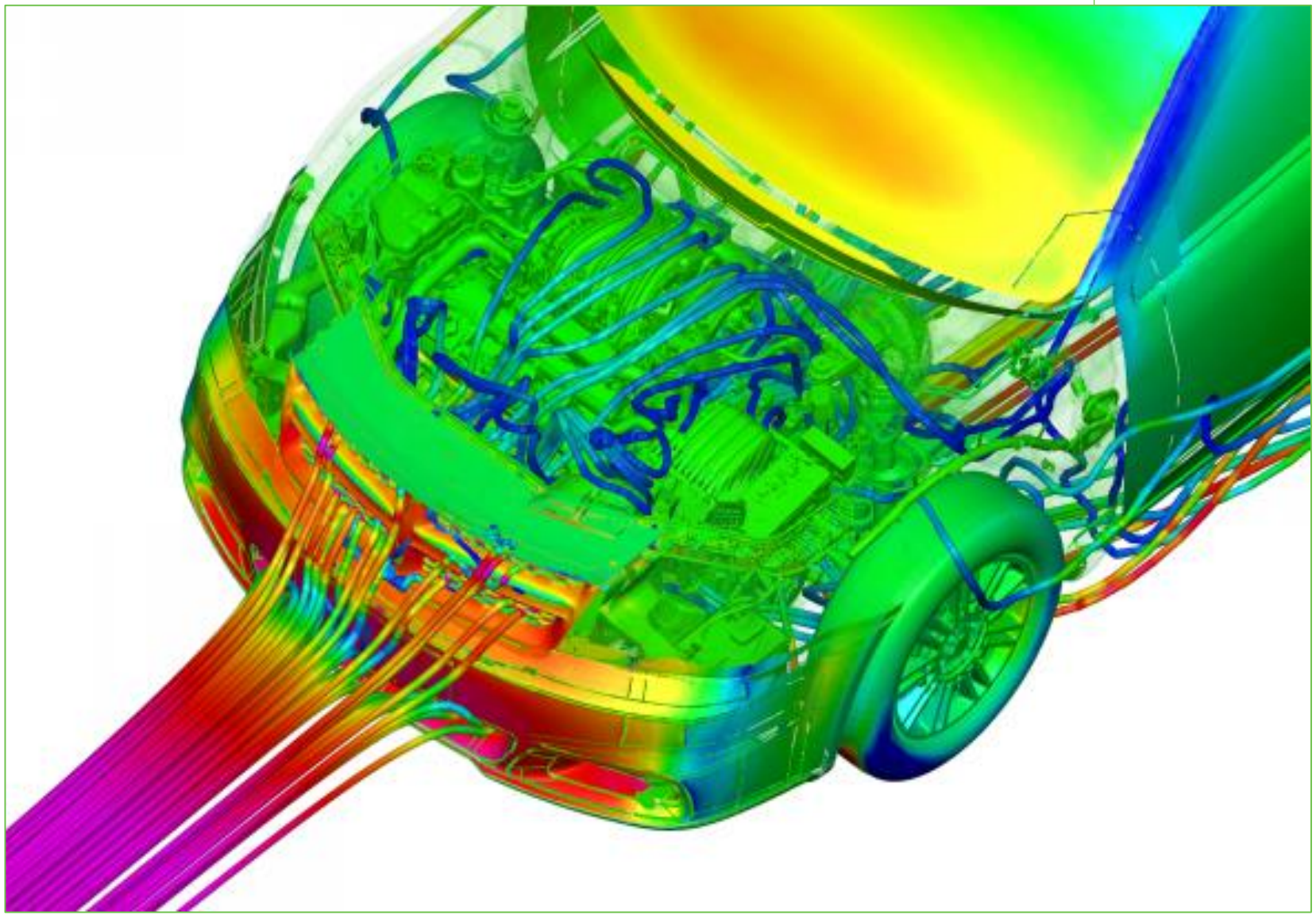

CREO FLOW ANALYSIS EXTENSION

CFD

- Fully-integrated in PTC Creo
- Easy to setup and use
- Solution for the engineer through analyst
- High performance solver

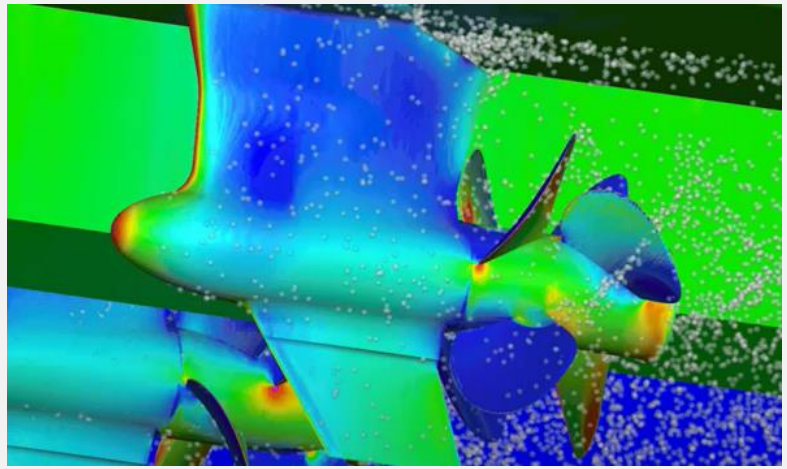

Also in Creo 4.0 M040

Powered by Simerics TECHNOLOGY BY DESIGN

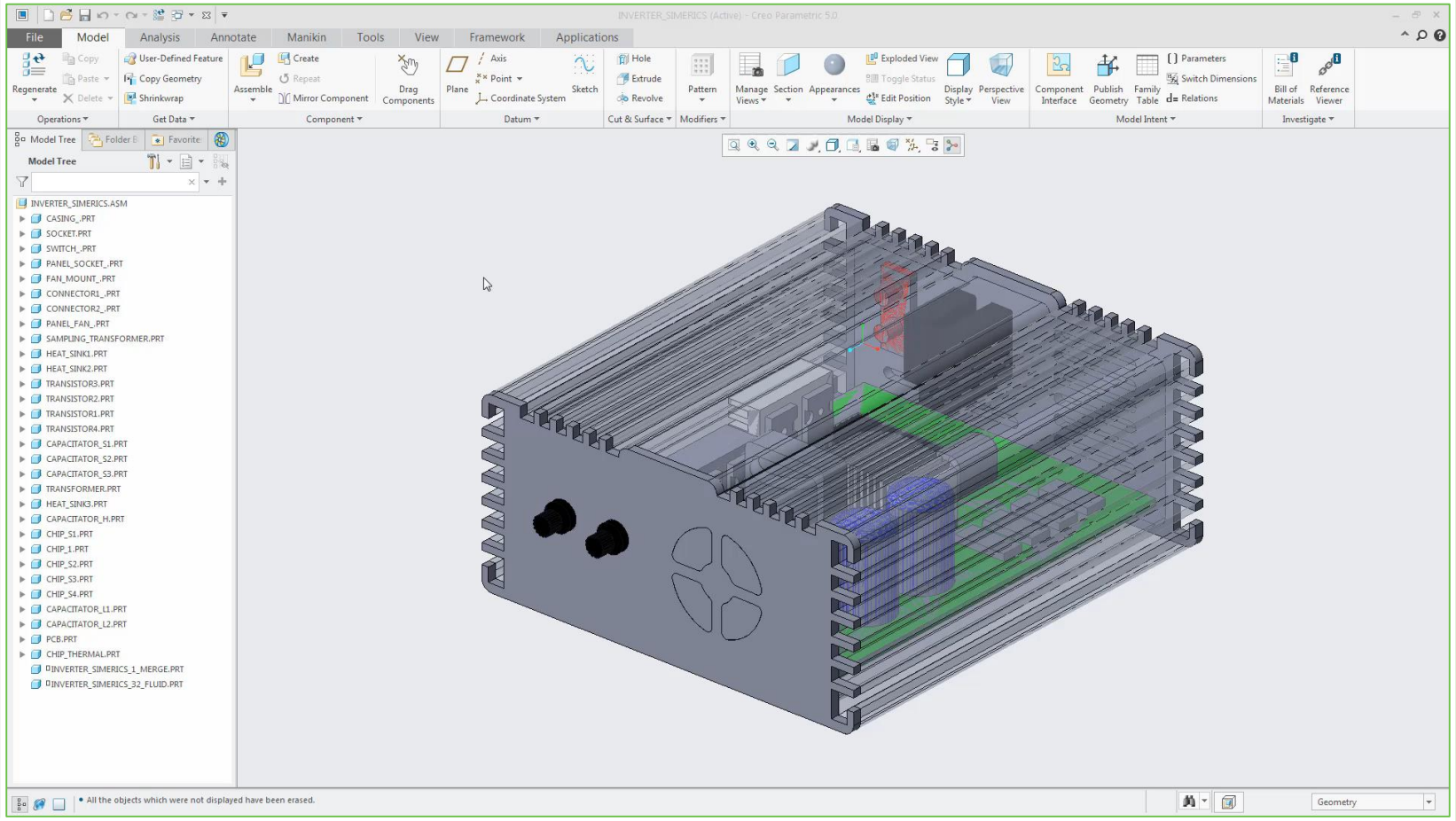

CREO FLOW ANALYSIS OPTIONS

Creo Flow Analysis Premium

Capabilities:

- Additional Analysis Types:
  - Cavitation
  - Multiphase
  - Multicomponent
  - Dynamics

Creo Flow Analysis Plus

Capabilities:

- Additional Analysis Types:
  - Particle
  - Radiation
  - Species
  - Moving/Sliding Meshing

Creo Flow Analysis

Capabilities:

- Calculate Internal and External Flows
- Animate Flow results in real-time
- Analysis Types:
  - Flow
  - Heat
  - Turbulence
- Parallel Processing Simulation

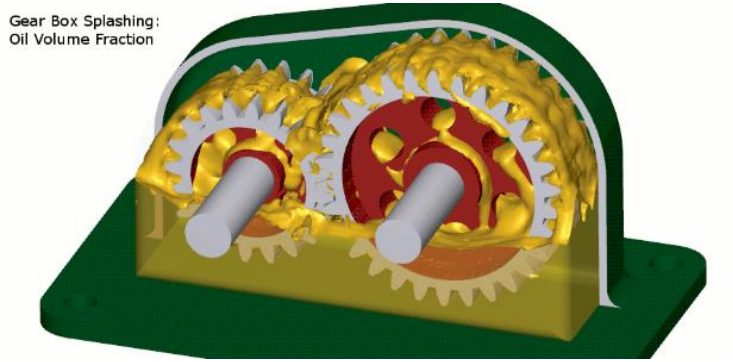

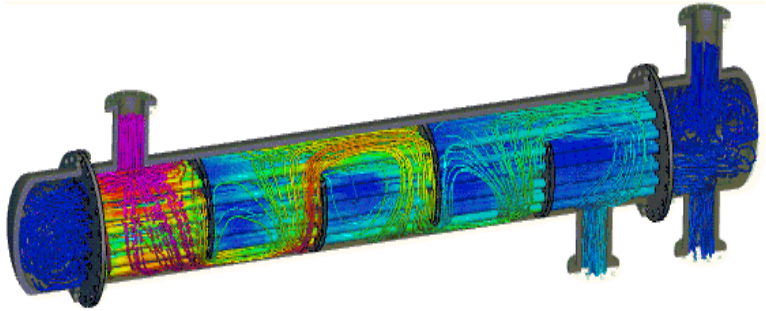

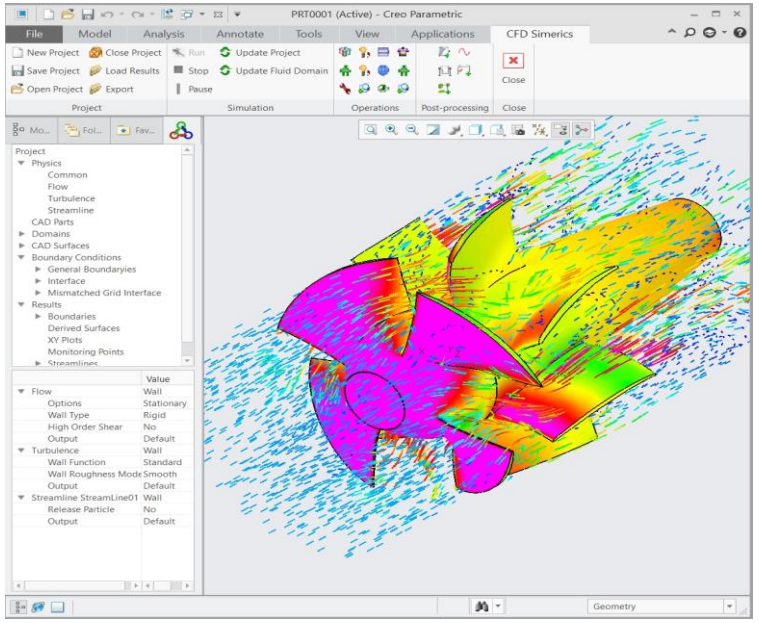

MOLD MACHINING

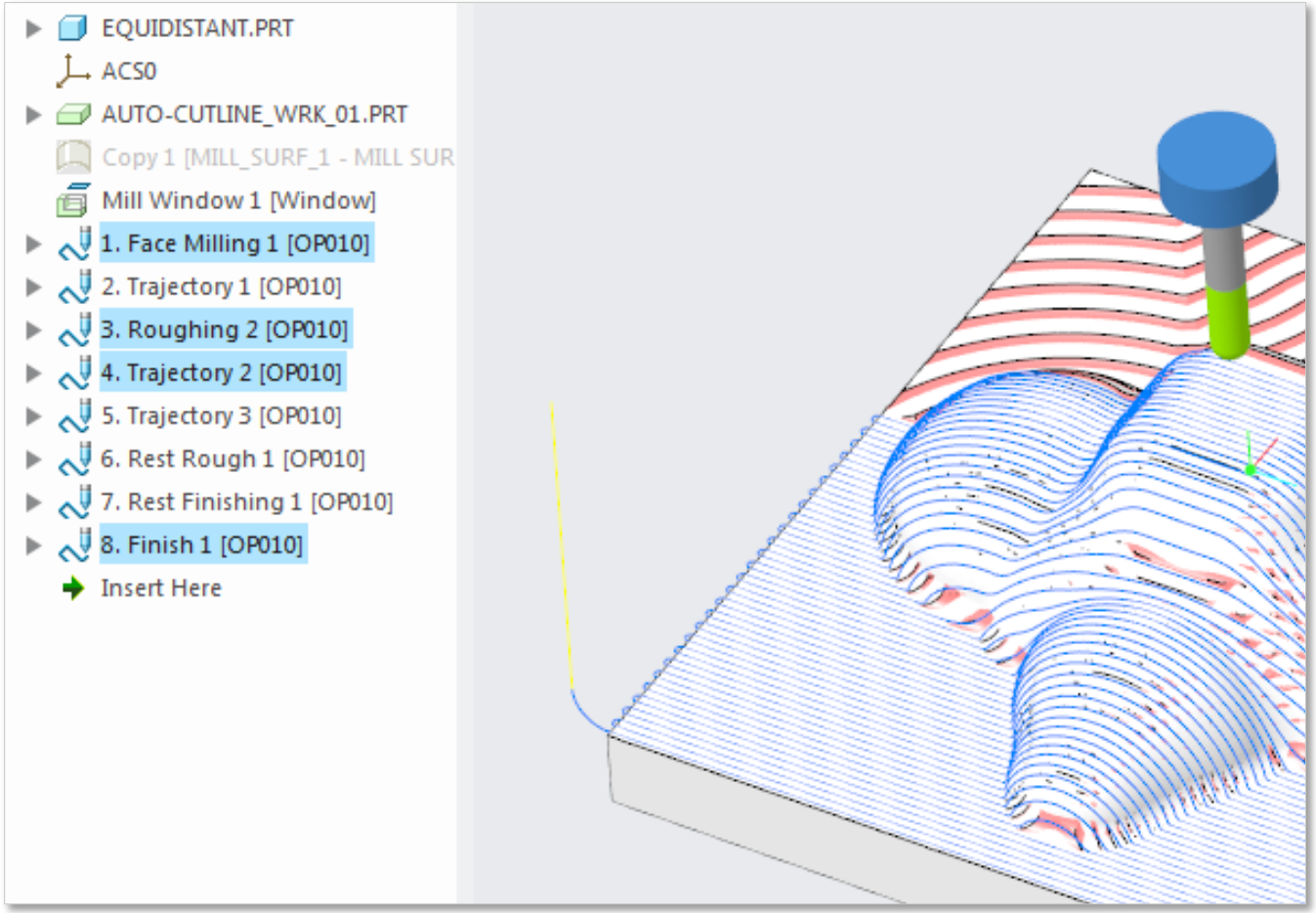

CREO MOLD MACHINING EXTENSION

Generate optimized toolpaths for the fabrication of molds or any situation in which low volume, geometry-based NC programming is required.

- Fully-integrated in Creo
- Automatically regenerate toolpaths when your design changes
- Supports 3-Axis and 3+2 Positioning Machining
- Powered by Module Works

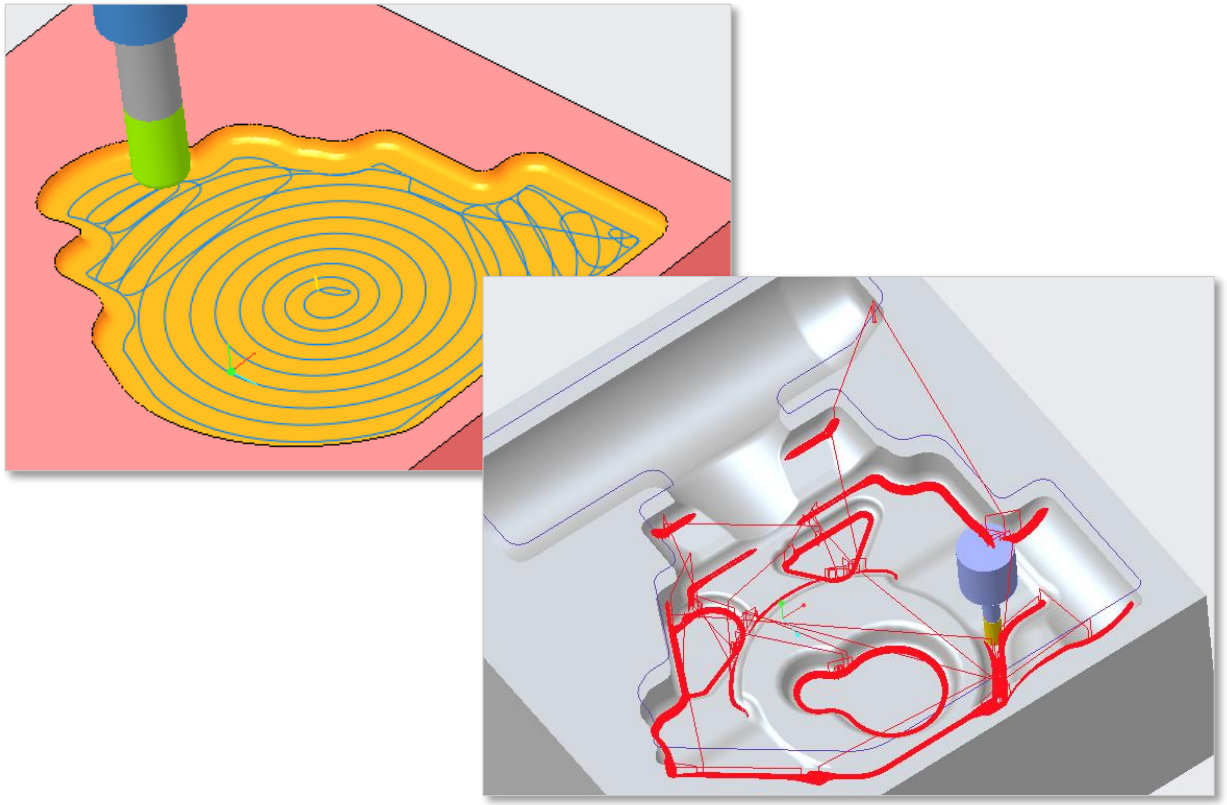

ptc