PTC® PRODUCT & SERVICE ADVANTAGE®

INNEO® That's IT.

PTC Creo 3.0

Design Better Products, Faster

Klaus Raab
INNEO Solutions GmbH

Stefan Marks
CAD Segment Europe PTC

16. Bayreuther 3D - Konstrukteurstag
17.09.2014

Realize the Value of PTC Creo 3.0 Today…

PTC®

What is PTC Creo?

Why PTC Creo?

What's new in PTC Creo 3.0?

Realize the Value of PTC Creo 3.0 Today…

PTC®

What is PTC Creo?

Why PTC Creo?

What's new in PTC Creo 3.0?

How does PTC Creo support Product Development?

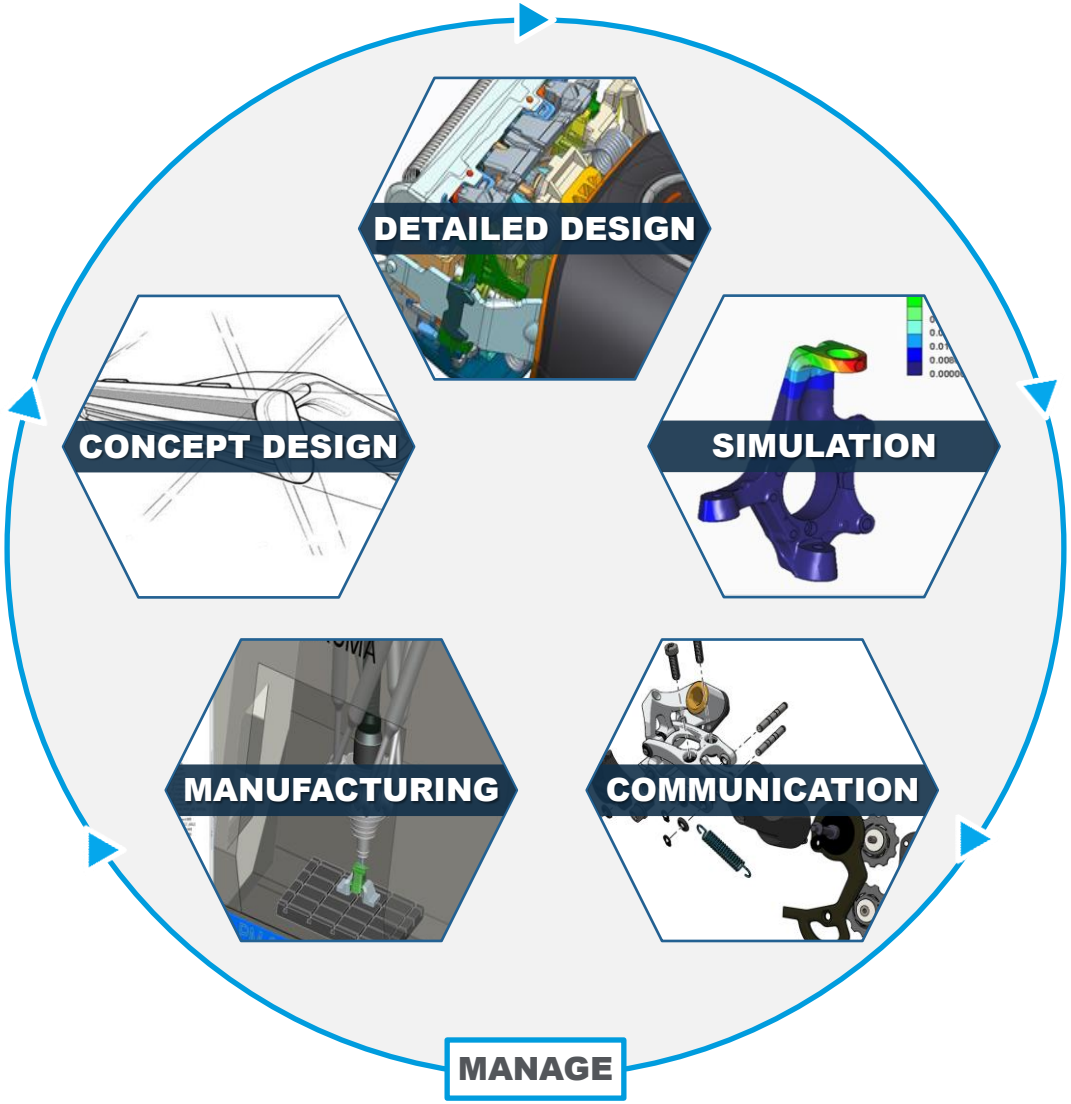

What is PTC Creo?

a **scalable, interoperable** suite of product design software that delivers **fast time to value**

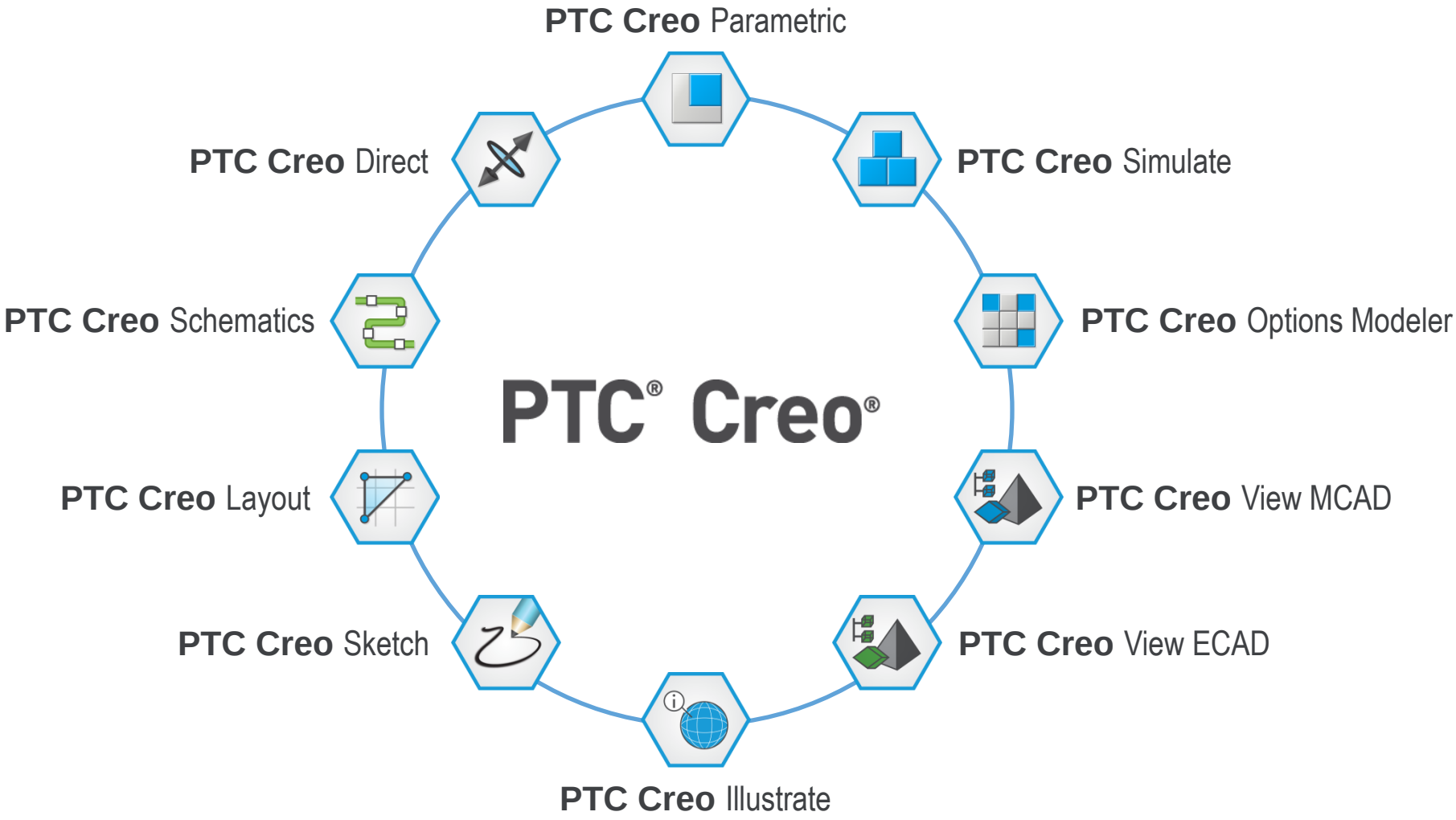

Realize the Value of PTC Creo 3.0 Today…

PTC®

What is PTC Creo?

Why PTC Creo?

What's new in PTC Creo 3.0?

Customers Are Making the Move to PTC Creo

PTC®

Aerospace & Defense	Automotive Transportation	Electronics & High Tech	Industrial	Retail & Consumer	Medical Devices
MBDA MISSILE SYSTEMS 207 Seats live on Creo 2.0	ZF 1500 user live on Creo 2.0	ABB "Transformers" on Creo 2.0	Schindler 150 seats live on Creo 2.0	BRAUN 300 users live on Creo 2.0	PHILIPS 350 seats live on Creo 2.0
FN HERSTAL 80 users live on Creo 2.0	KN 350 seats live on Creo 2.0	JENOPTIK 150 seats live on Creo 2.0	SMS group Over 350 seats live on Creo 2.0	ROLEX Over 450 users live on Creo 2.0	novo nordisk® 80 seats live on Creo 2.0
LOCKHEED MARTIN 50 users live on Creo 2.0	Ferrari Live on Creo 2.0	ERICSSON 150 seats live on Creo 2.0	FESTO 250 seats live on Creo 2.0	RICHEMONT 350 seats live on Creo 2.0	ottobock. 80 seats live on Creo 2.0
	HARMAN 105 seats live on Creo 2.0	BANG & OLUFSEN 56 seats live on Creo 2.0	Tetra Pak 350 seats live on Creo 2.0	Vaillant 200 users live on Creo 2.0	GE Healthcare 25 users in France live on Creo 2.0
	KTM 150 seats live on Creo 2.0	GN ReSound Hearing Innovations for Life 60 seats live on Creo 2.0	HELLER 150 seats live on Creo 2.0	Danfoss 300 user live on Creo 2.0	
	AnsaldoBreda 40 seats live on Creo 2.0				

Seamlessly Move from Pro/ENGINEER to PTC Creo

PTC®

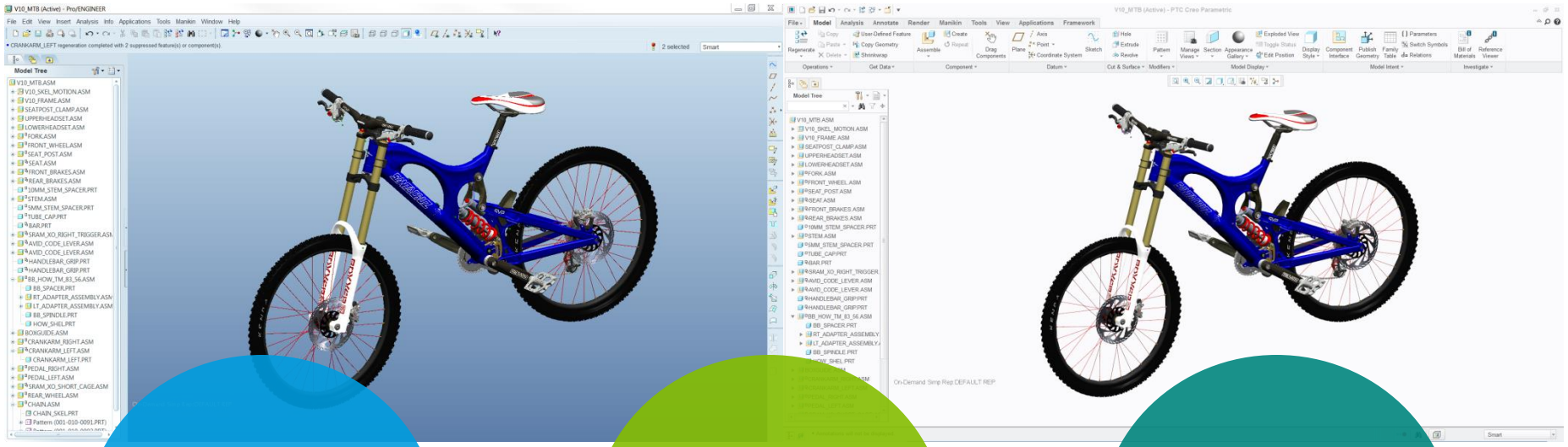

Fully Upward Compatible

Open your Pro/ENGINEER data directly in PTC Creo

Same Powerful Capabilities

All the Pro/ENGINEER capabilities you have today are available in PTC Creo

Keep Your Custom Settings

Directly re-use your Pro/ENGINEER configurations and environment settings

Productivity Benchmark Results:
PTC Creo Parametric vs. Pro/ENGINEER Wildfire 5.0

PTC®

Productivity Benchmarks* across Eight Key Areas

User Experience

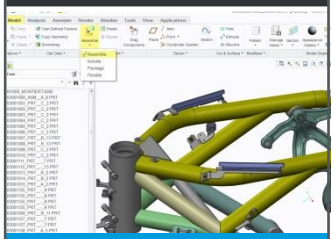

20% Faster

Sketching

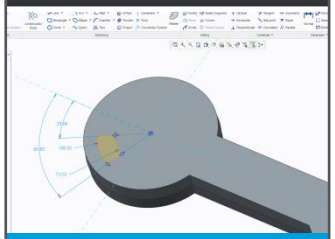

28% Faster

Large Assemblies

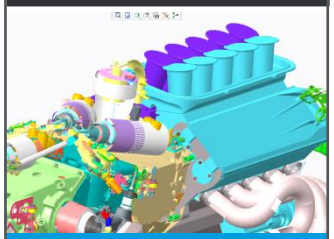

10x Faster

Stylized Design

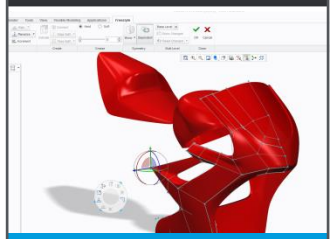

10x Faster

Sheet Metal Design

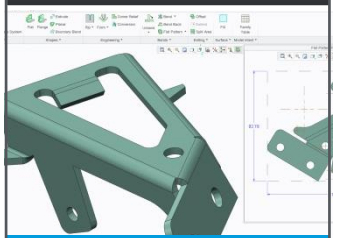

2x Faster

3D Cross Sections

2x Faster

3D Annotations

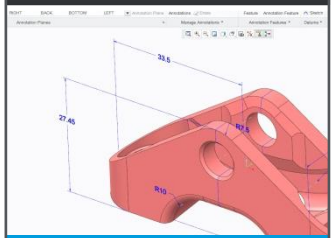

2x Faster

Measuring

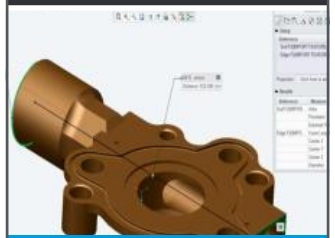

10% Faster

All capabilities above do not require purchase of additional apps or extensions
Completed by 3rd party independent consultant

Realize the Value of PTC Creo 3.0 Today…

PTC®

What is PTC Creo?

Why PTC Creo?

What's new in PTC Creo 3.0?

What's New in PTC Creo 3.0

PTC®

Breakthrough Multi-CAD Technology

Concept Design Improvements

PTC Creo Efficiency Improvements

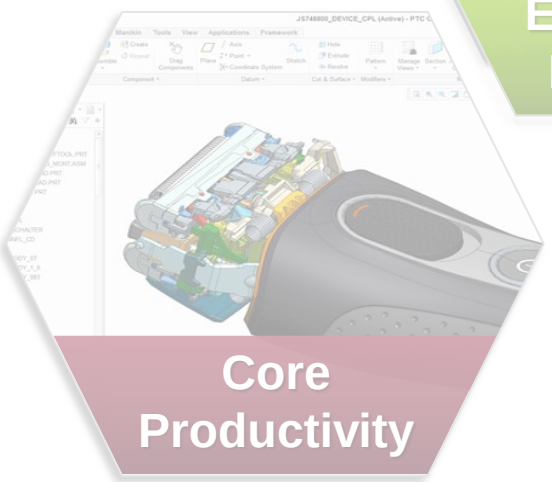

Unite Technology

Enabling Optimal Multi-CAD Collaboration and Consolidation

- ***Import*** all common 3D CAD formats
  - SolidWorks, CATIA, NX, Inventor, SolidEdge
- ***Open*** key competitive 3D CAD formats
  - SolidWorks, NX, and CATIA
- ***Automatically update*** new versions of non-PTC Creo data within your designs
- ***Save As*** key competitive 3D CAD formats
  - SolidWorks, NX, and CATIA formats

CAD Consolidation with Unite Technology

PTC Creo 3.0 supports CAD consolidation:

- ***Import*** all common 3D CAD formats
  - SolidWorks, CATIA, NX, Inventor, SolidEdge
- ***Open*** key competitive 3D CAD formats
  - SolidWorks, NX, and CATIA
- ***Automatically update*** new versions of non-PTC Creo data within your designs
- ***Save As*** key competitive 3D CAD formats
  - SolidWorks, NX, and CATIA formats

Consolidate CAD systems to improve quality, speed time to market and lower costs for both Engineering and IT

CONSOLIDATION

BEST IN CLASS COMPANIES ARE 35% MORE LIKELY TO STANDARDIZE ON ONE CAD SYSTEM[1]

[1] *Working with Mulit-CAD? Overcoming the Engineering Collaboration Bottleneck – Aberdeen Group*

JS488488_SHAVER_DEVICE (Active) - PTC Creo Parametric

File | Model | Analysis | Annotate | Render | Manikin | Tools | View | Applications | Framework

Regenerate | Assemble | Drag Components | Plane | Axis | Point | Coordinate System | Sketch | Hole | Extrude | Revolve | Pattern | Manage Views | Section | Appearance Gallery | Display Style | Component Interface | Publish Geometry | Family Table | Bill of Materials | Reference Viewer

Operations | Get Data | Component | Datum | Cut & Surface | Modifiers | Model Display | Model Intent | Investigate

Model Tree

- JS488488_SHAVER_DEVICE.ASM
  - ASM_RIGHT
  - ASM_TOP
  - ASM_FRONT
  - ASM_DEF_CSYS
  - JS748800_DEVICE_CPL.ASM
  - JS5184_HEAD_DEVICE.ASM
    - Placement
    - ASM_RIGHT
    - ASM_TOP
    - ASM_FRONT
    - ASM_DEF_CSYS
    - Insert Here
  - Insert Here
  - Sections
    - XSEC0001

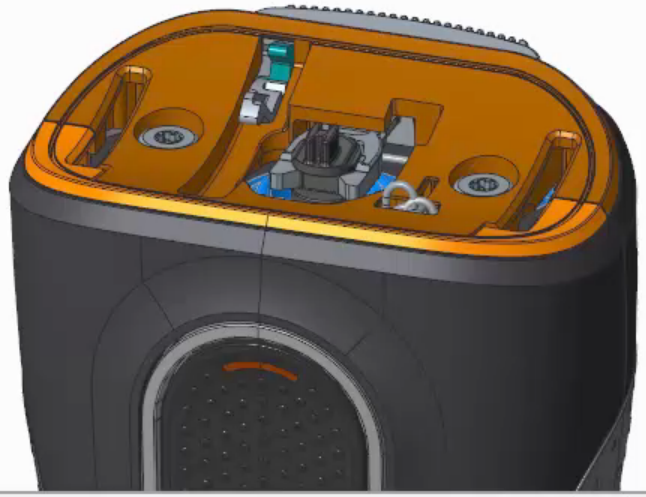

• All the objects which were not displayed have been erased.

Smart

Unite Technology Addresses the Challenges of Data Migration

PTC®

Save time and money with an effective convert as needed workflow

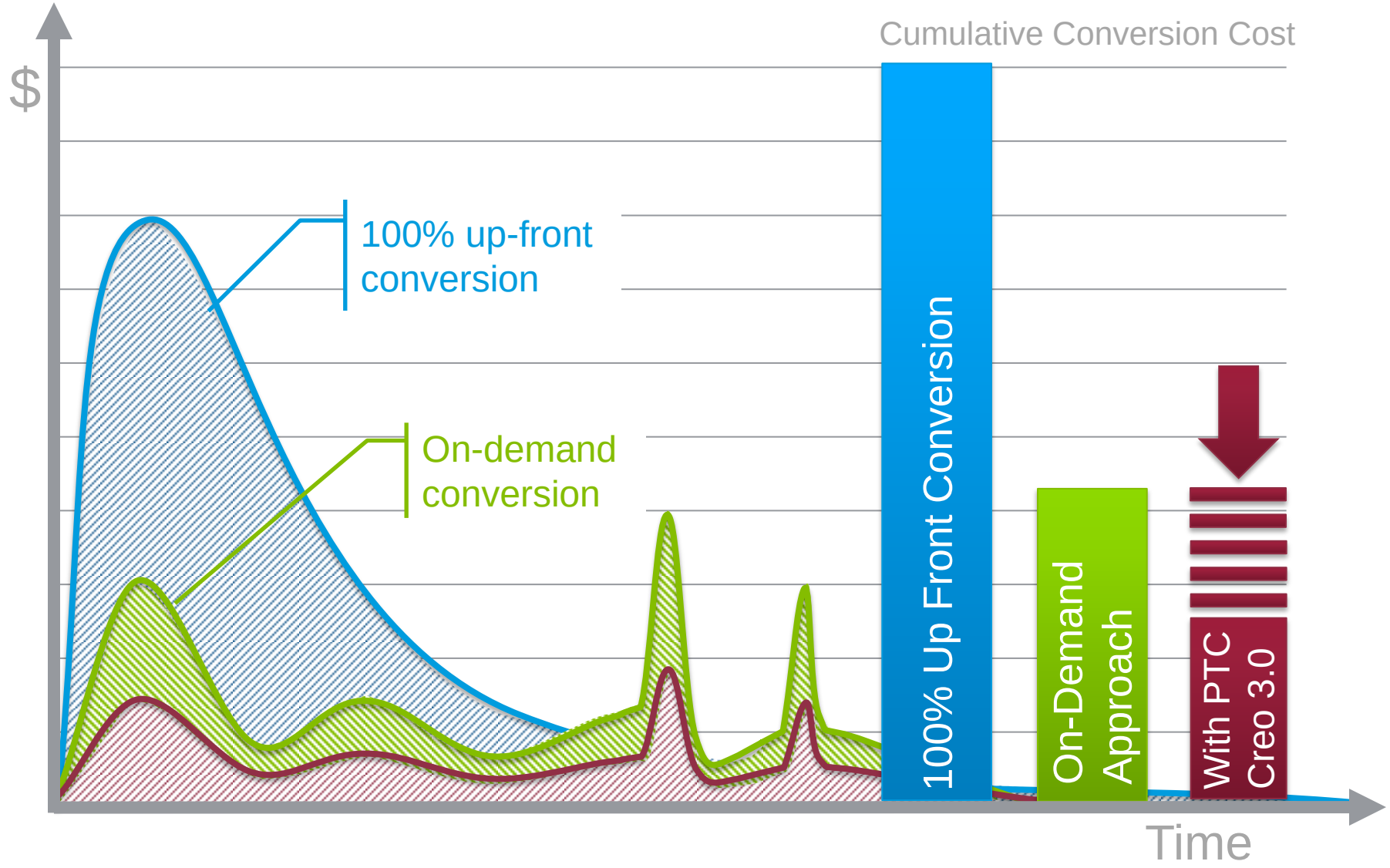

CAD Consolidation with PTC Creo 3.0

PTC®

Open

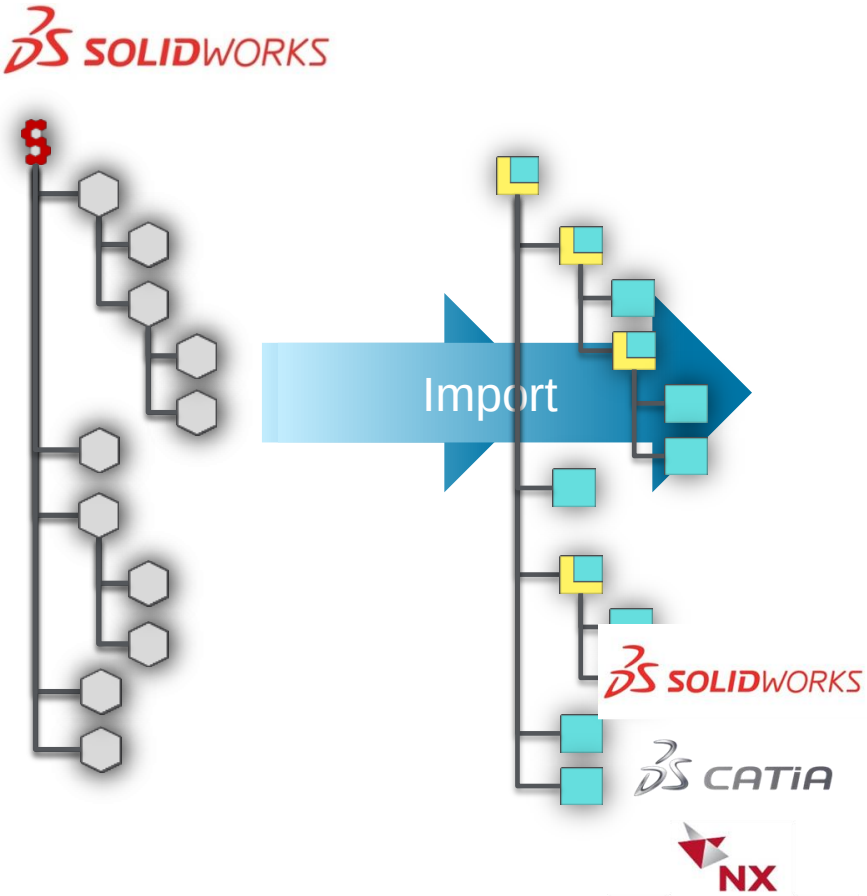

Minimal Conversion Upon Demand

Import

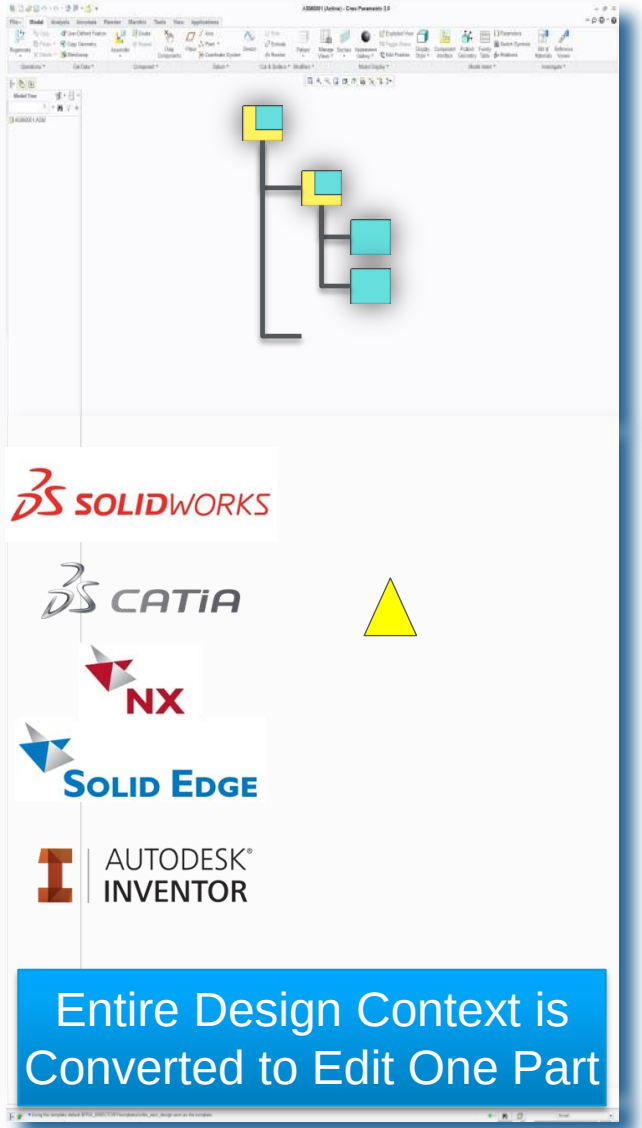

Entire Design Context is Converted to Edit One Part

PTC Creo 3.0 Consolidation Video

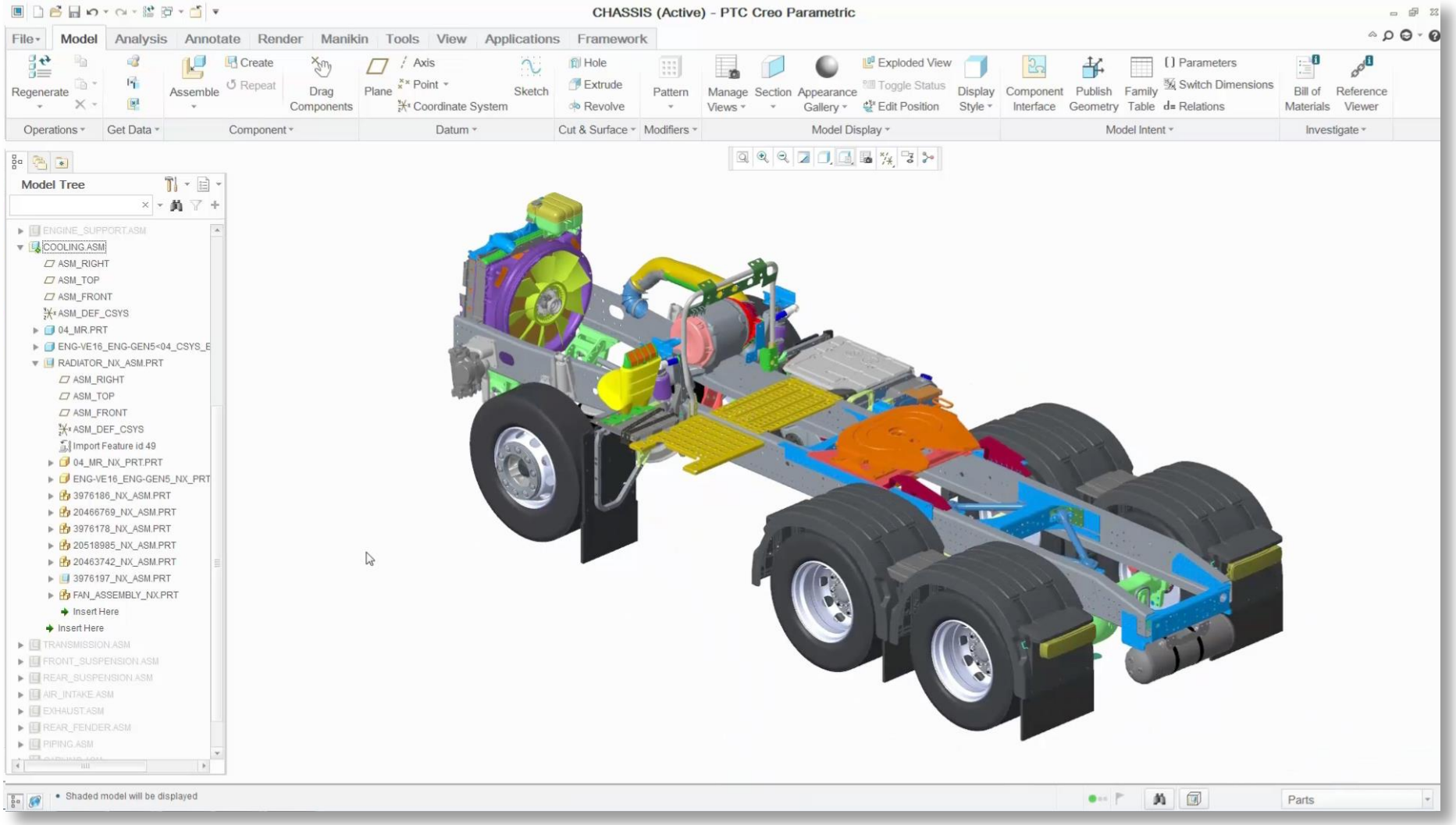

Obstacles to CAD Consolidation

PTC®

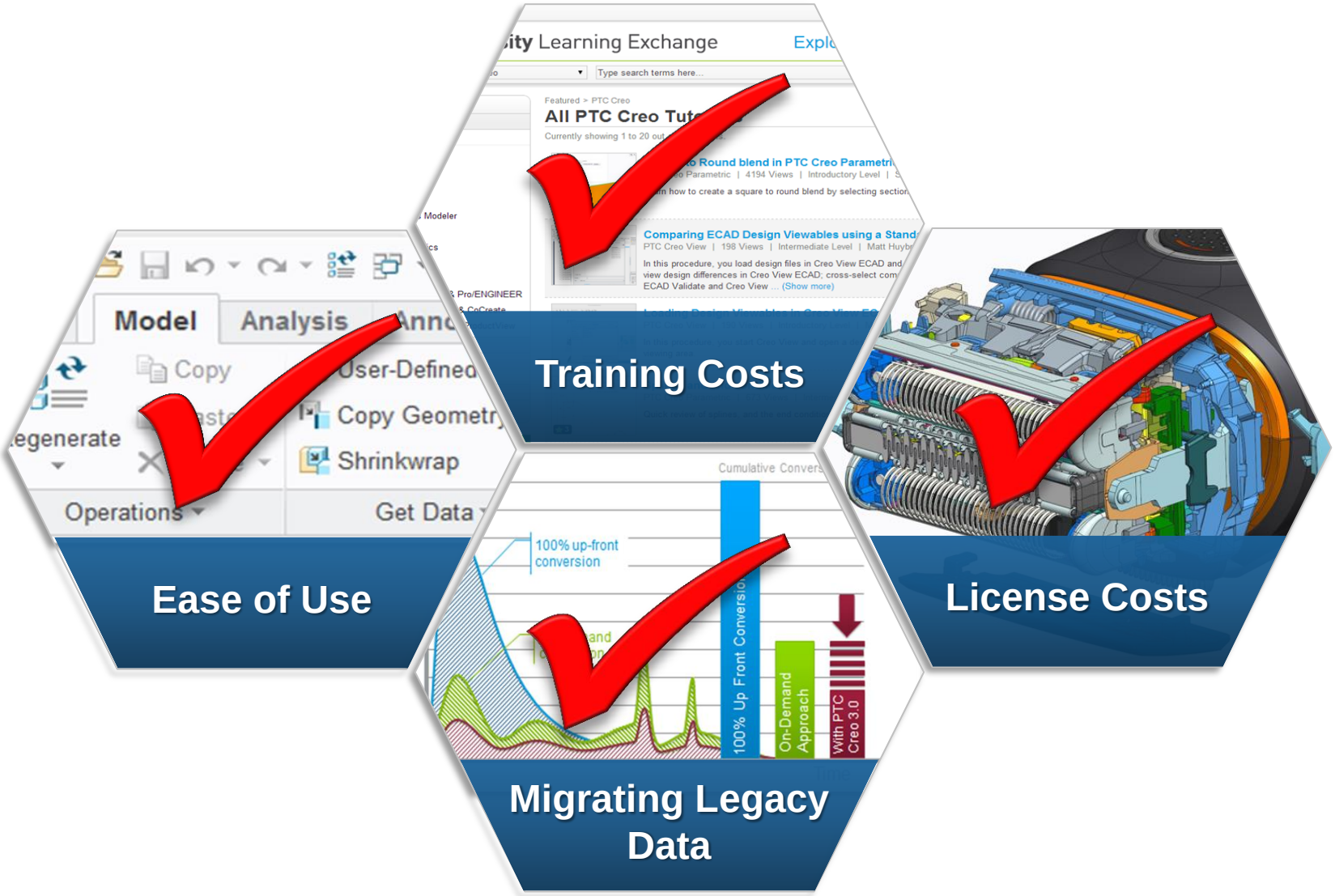

Consolidate to a Single CAD System Easily with PTC Creo

Benefits

- Convert Data as needed, when needed
- Easily re-use legacy 2D and 3D data with minimal PDM effort
- Reduce # of CAD platforms and the associated costs of Software Licenses, Support and Training
- Increase Engineering Productivity and IT Efficiency
- Enable a “Design Anywhere, Build Anywhere” strategy

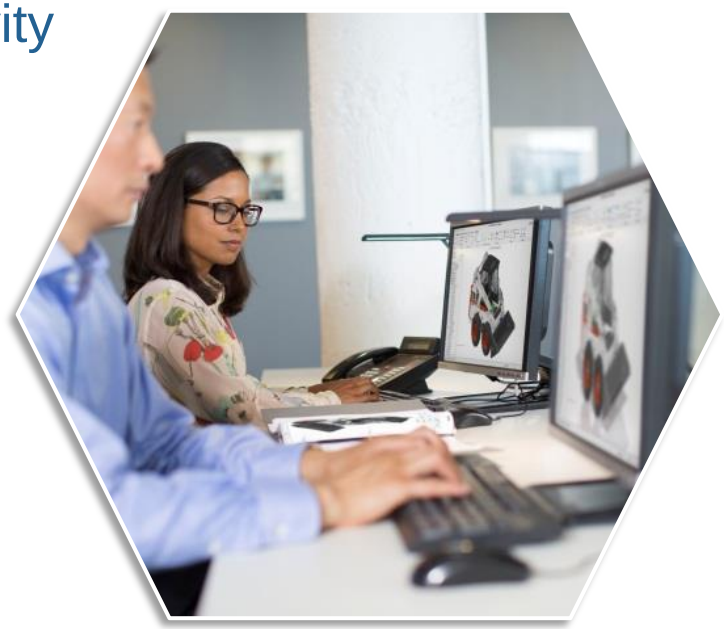

Enable Effective Collaboration with Unite Technology

PTC Creo 3.0 supports CAD collaboration:

- ***Import*** all common 3D CAD formats
  - SolidWorks, CATIA, NX, Inventor, SolidEdge
- ***Open*** key competitive 3D CAD formats
  - SolidWorks, NX, and CATIA
- ***Automatically update*** new versions of non-PTC Creo data within your designs
- ***Save As*** key competitive 3D CAD formats
  - SolidWorks, NX, and CATIA formats

59% OF PEOPLE HAVE DIFFICULTY MANIPULATING IMPORTED MODELS[2]

COLLABORATION

Support more effective product development and drive on-time delivery by working more efficiently with other departments, suppliers or development partners.

[2] PTC survey of 7,000 manufacturing organizations, October, 2011

Collaboration with Unite Technology

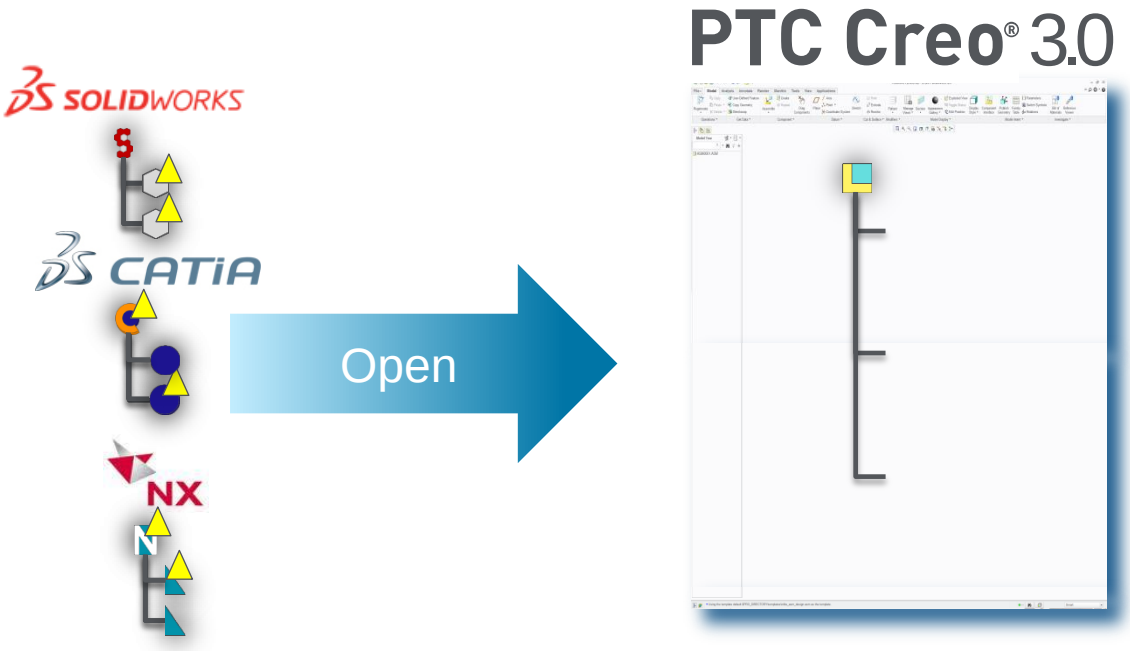

- non-PTC Creo Data:
  - Updated natively
  - Managed natively

Collaboration with Unite Technology

PTC®

Easily provide PTC Creo data in other formats

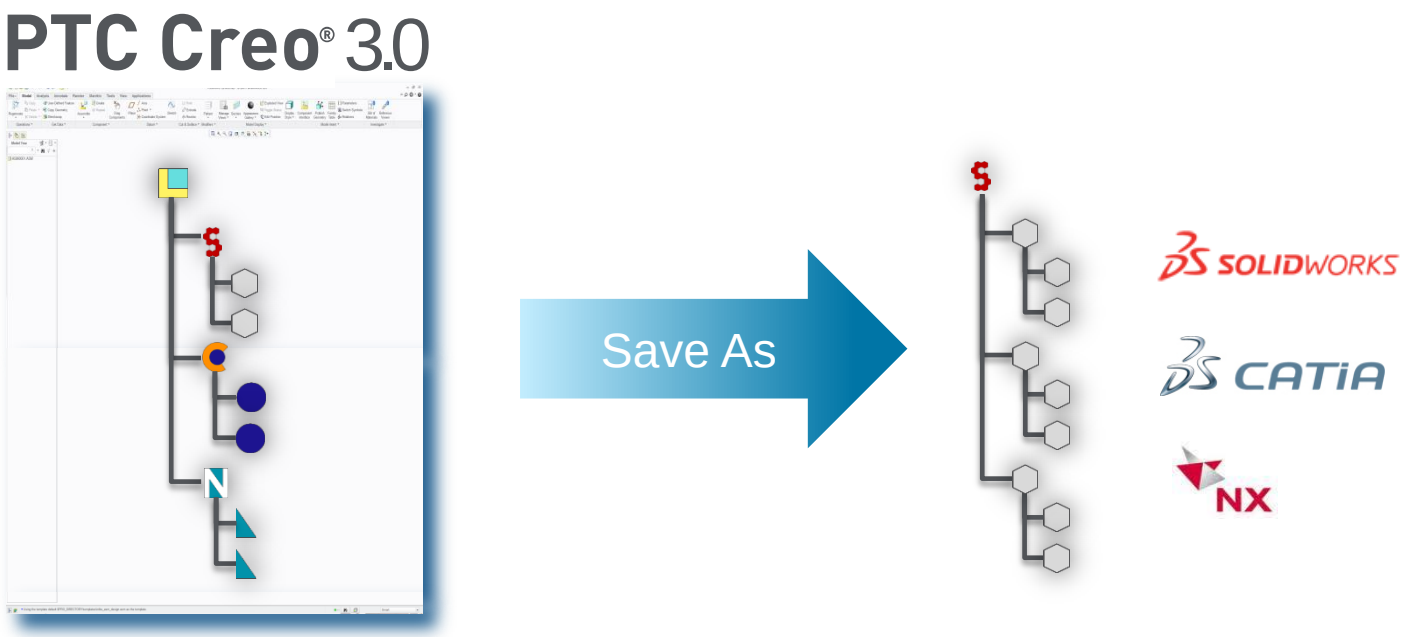

With the PTC Creo Collaboration Extensions, you can easily save your data in SolidWorks, CATIA or NX formats.

Unite Multi-CAD Collaboration Examples

PTC Creo® 3.0

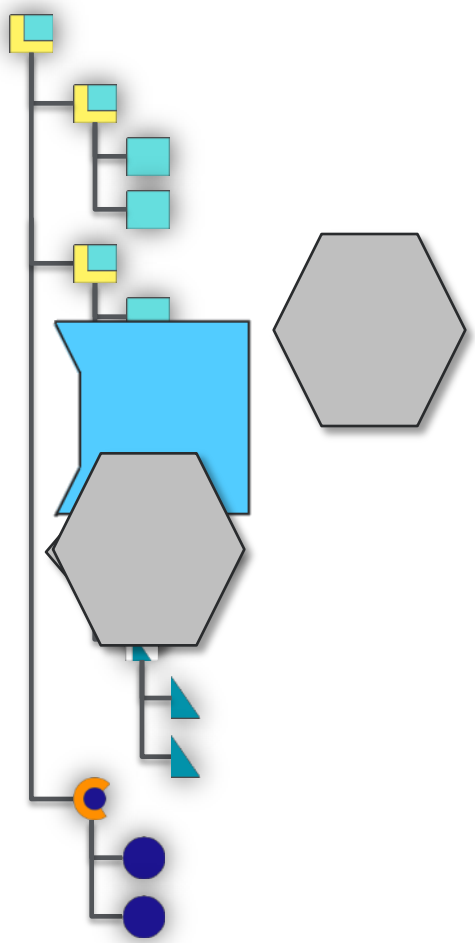

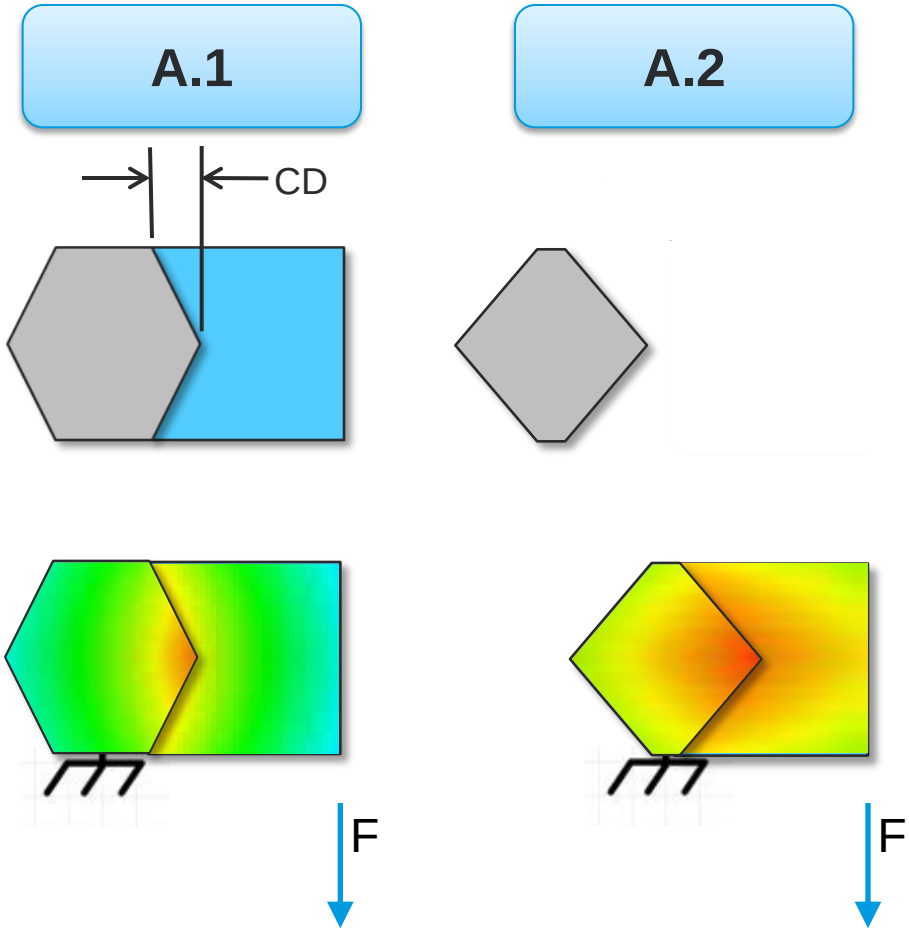

PTC Creo 3.0 Collaboration Video

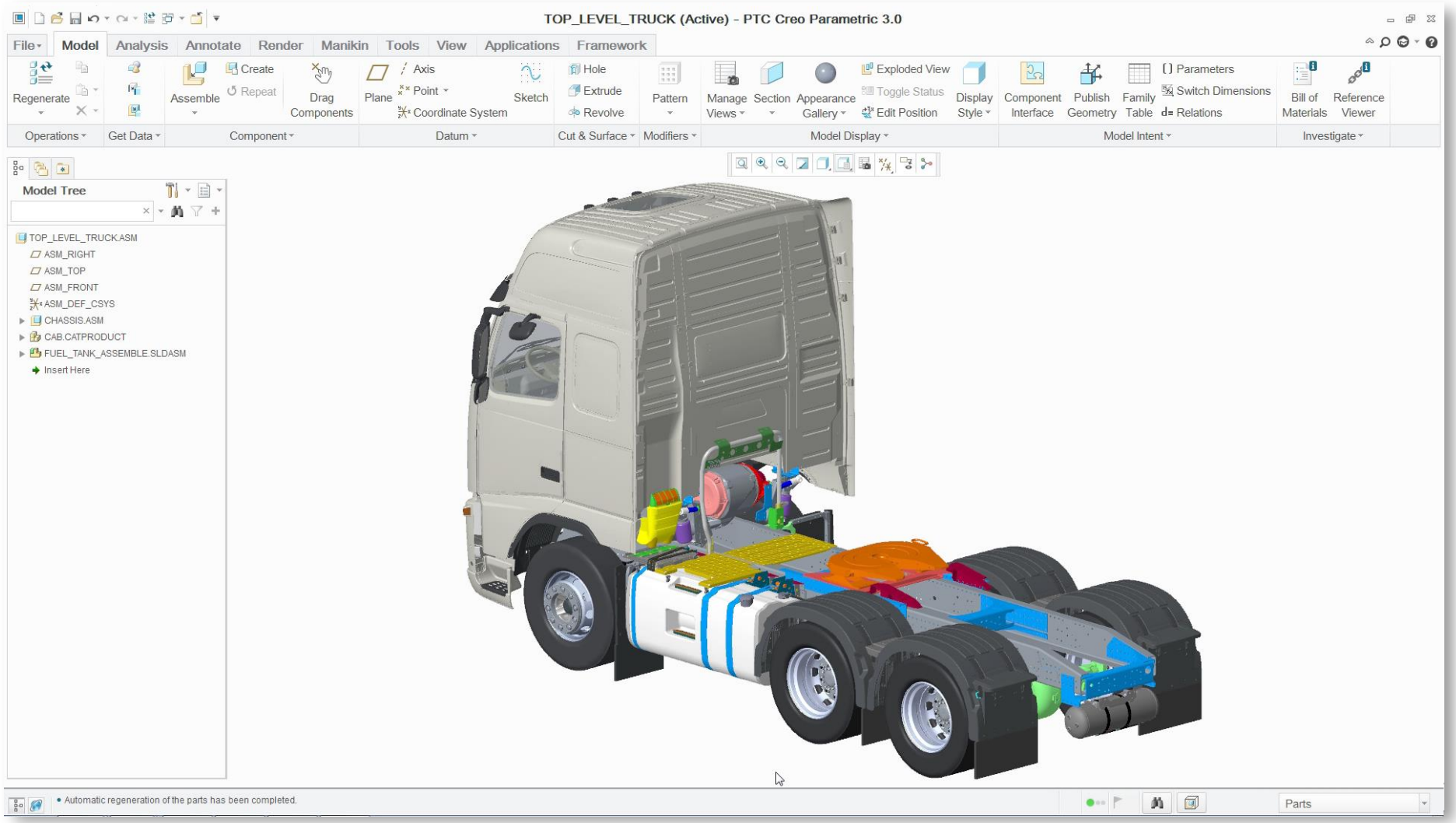

Collaborate Effectively in a Multi-CAD Environment with PTC Creo

Benefits

- Collaborate early and often with partners and suppliers
  - Easily incorporate non-PTC Creo data early in the design process
- Support the Delivery of Products on Schedule
  - Reduce the impact of late stage design changes
- Reduce the need to create and manage neutral formats
  - Exchange information in the most common 3D CAD formats
- Promote Data Re-use and Sharing

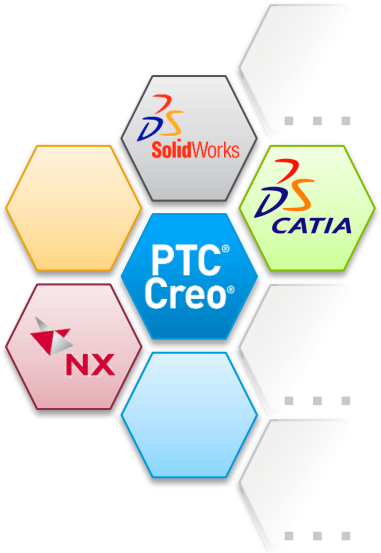

What's New in PTC Creo 3.0

PTC®

Breakthrough Multi-CAD Technology

Concept Design Improvements

PTC Creo Efficiency Improvements

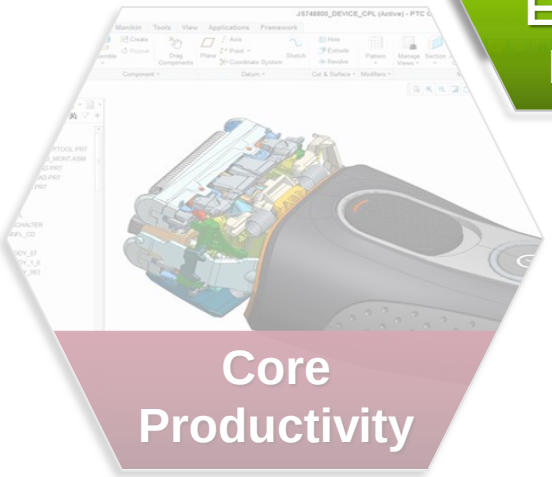

Industrial Design with Freestyle

- Capabilities
  - Rapid freeform surface creation
  - Direct manipulation with 3D dragger
  - **NEW!** Parametric control over freeform geometry
  - Trim, merge, round, thicken, solidify to make the model solid
  - **NEW!** Join faces and edges
  - High quality, curvature continuous, manufacturable surfaces

- Benefits
  - Quickly create the highest quality and most innovative products
  - Accelerate concept design
  - Generate more proposed concepts

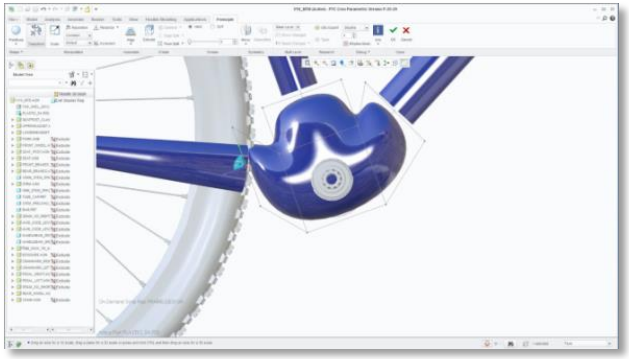

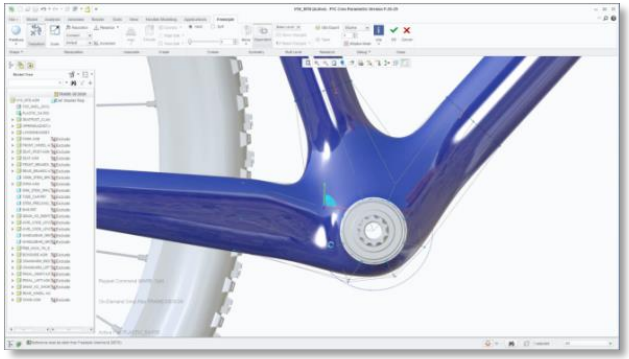

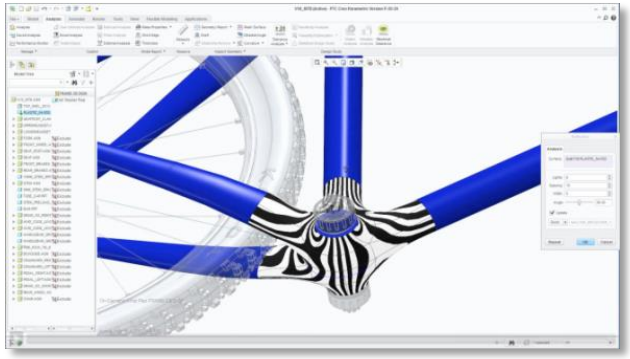

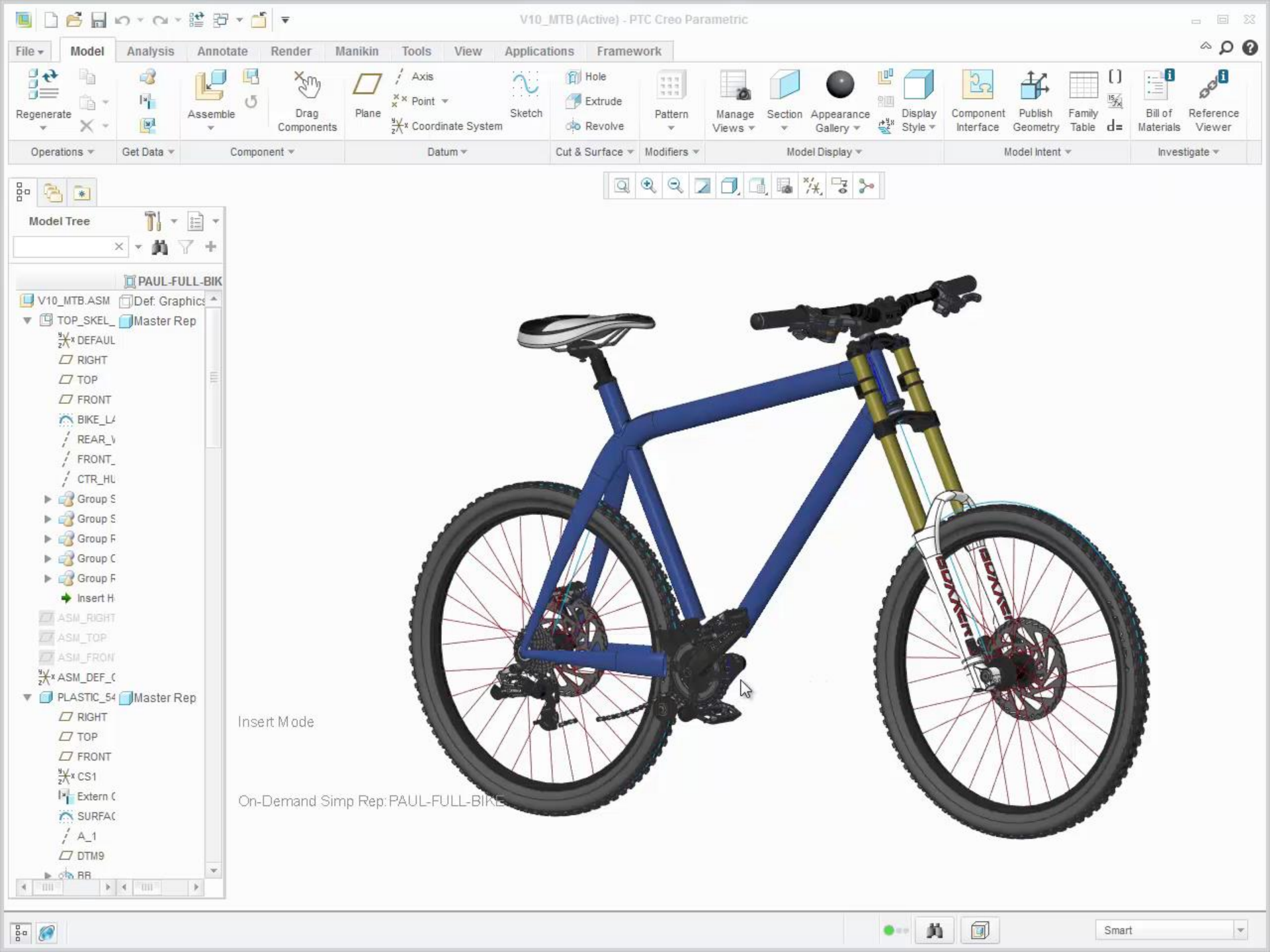
V10_MTB (Active) - PTC Creo Parametric
File
Model
Analysis
Annotate
Render
Manikin
Tools
View
Applications
Framework
Regenerate
Assemble
Drag Components
Plane
Axis
Point
Coordinate System
Sketch
Hole
Extrude
Revolve
Pattern
Manage Views
Section
Appearance Gallery
Display Style
Component Interface
Publish Geometry
Family Table
Bill of Materials
Reference Viewer
Operations
Get Data
Component
Datum
Cut & Surface
Modifiers
Model Display
Model Intent
Investigate
Model Tree
PAUL-FULL-BIK
V10_MTB.ASM
Def: Graphics
TOP_SKEL_
Master Rep
DEFAUL
RIGHT
TOP
FRONT
BIKE_LA
REAR_V
FRONT_
CTR_HU
Group S
Group S
Group F
Group C
Group F
Insert H
ASM_RIGHT
ASM_TOP
ASM_FRONT
ASM_DEF_C
PLASTIC_54
Master Rep
RIGHT
TOP
FRONT
CS1
Extern C
SURFAC
A_1
DTM9
BB
Insert Mode
On-Demand Simp Rep: PAUL-FULL-BIKE
Smart

Creating 2D Concepts with PTC Creo Layout

- Capabilities
  - Sketch, edit, and import 2D geometry
  - Create dimensions, notes, and tables
  - Organize information: Tags, structure, groups
  - **NEW!** Work concurrently on large 2D concepts
  - Leverage 2D Layout for 3D and updates made in 2D reflect in 3D
  - **NEW!** 2D design change notifications in 3D

- Benefits
  - Rapidly and easily analyze and refine concepts
  - Leverage existing IP in concept design
  - Better leverage 2D concept data in 3D detailed design
  - Reduce rework with 2D to 3D associativity

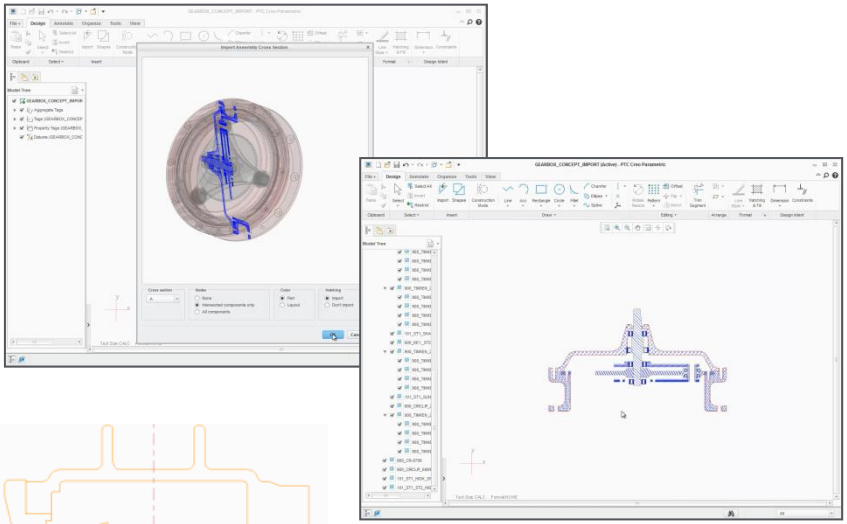

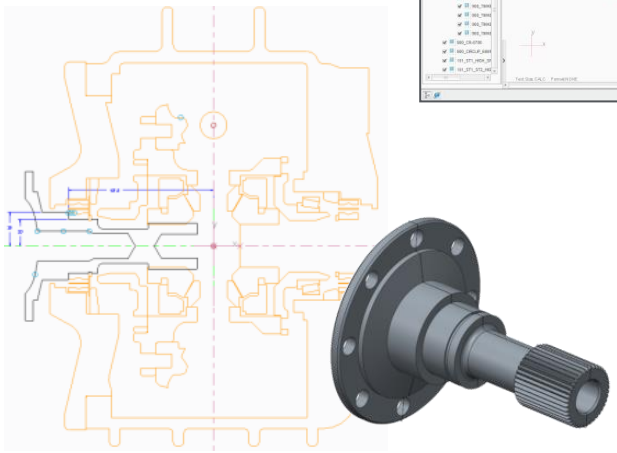

Create 2D Conceptual Layouts – Reuse 2D to Build 3D Models

Empowering Innovation with PTC Creo 3.0

PTC®

What's new in PTC Creo Layout 3.0

- New and Improved 2D Authoring Capabilities
  - Dependent copies
  - Cross hatching
  - Better snapping & guides
- Concurrent Layout Design
- Layout Data Sharing 3D Integration
  - New Data Sharing Feature part of AAX
    - 2D design change notification
    - Automated reuse of tagged entities in PTC Creo Parametric

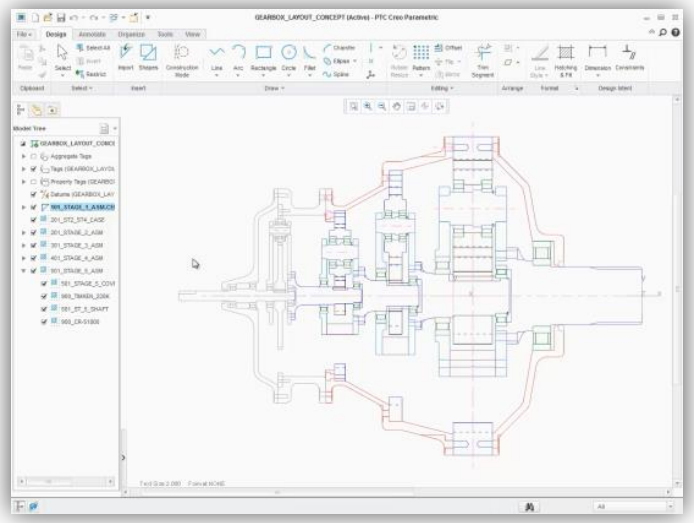

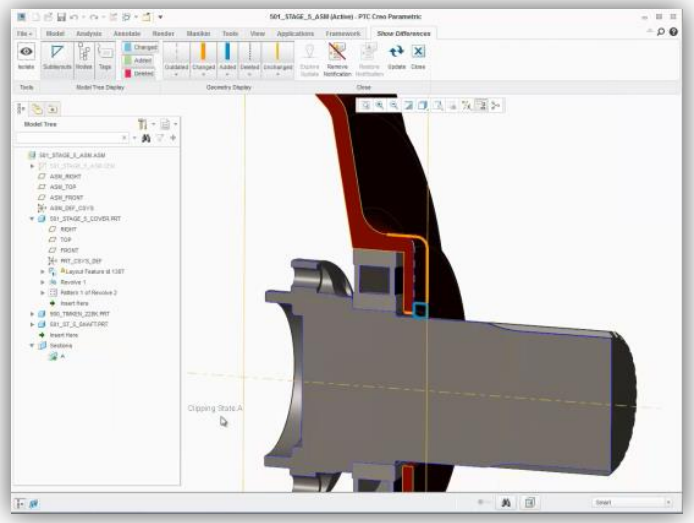

Quickly Creating 3D Concepts with PTC Creo Direct

- Capabilities
  - Fast, flexible 3D geometry creation and editing designed for casual users
  - Move, attach and remove geometry
  - Create and move components in an assembly context
  - Quickly position components with on-the-fly constraints
  - Change Tracking with PTC Creo Parametric
  - Import non-PTC Creo data

- Benefits
  - Enables cross-functional users to make design edits and suggestions
  - Easy, fast support for bid proposals
  - Faster, more flexible concept and detailed design

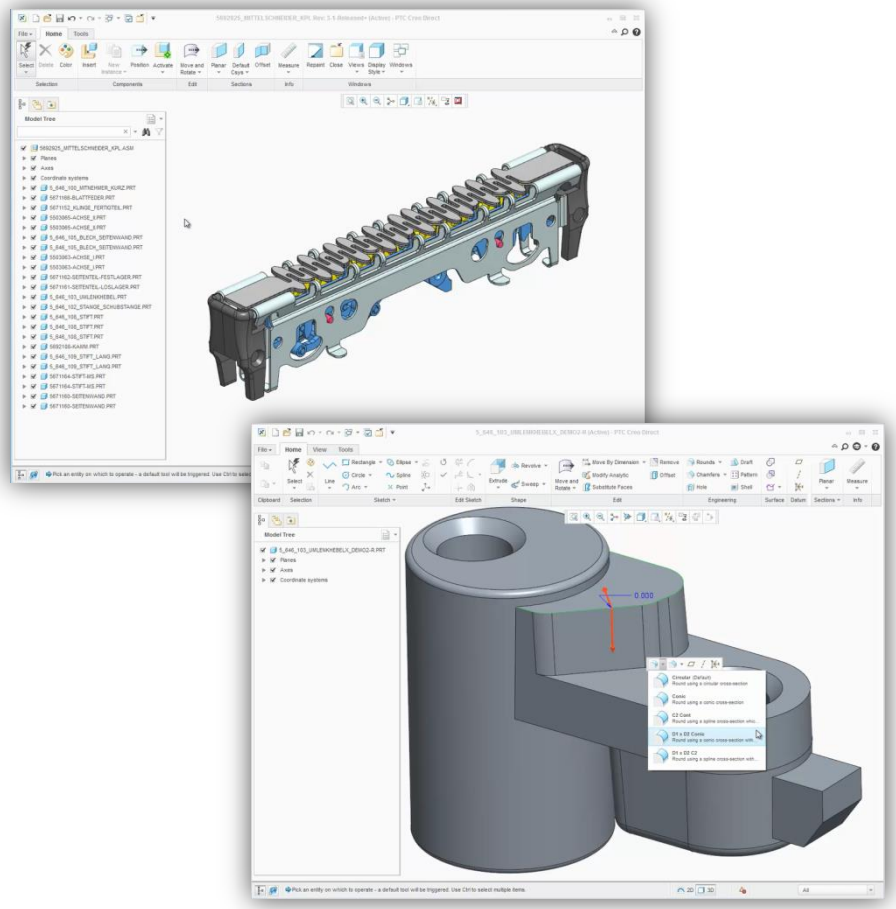

Make easy, intuitive changes to existing models

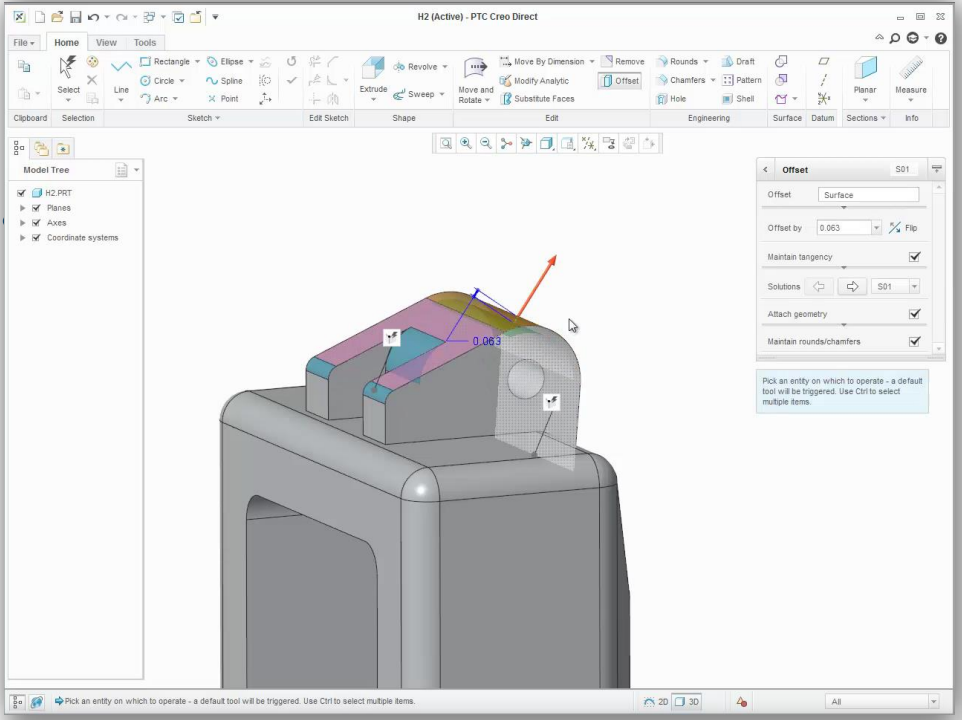
H2 (Active) - PTC Creo Direct
Model Tree
H2.PRT
Planes
Axes
Coordinate systems
Offset
Offset
Surface
Offset by
0.063
Flip
Maintain tangency
Solutions
S01
Attach geometry
Maintain rounds/chamfers
Pick an entity on which to operate - a default tool will be triggered. Use Ctrl to select multiple items.
0.063

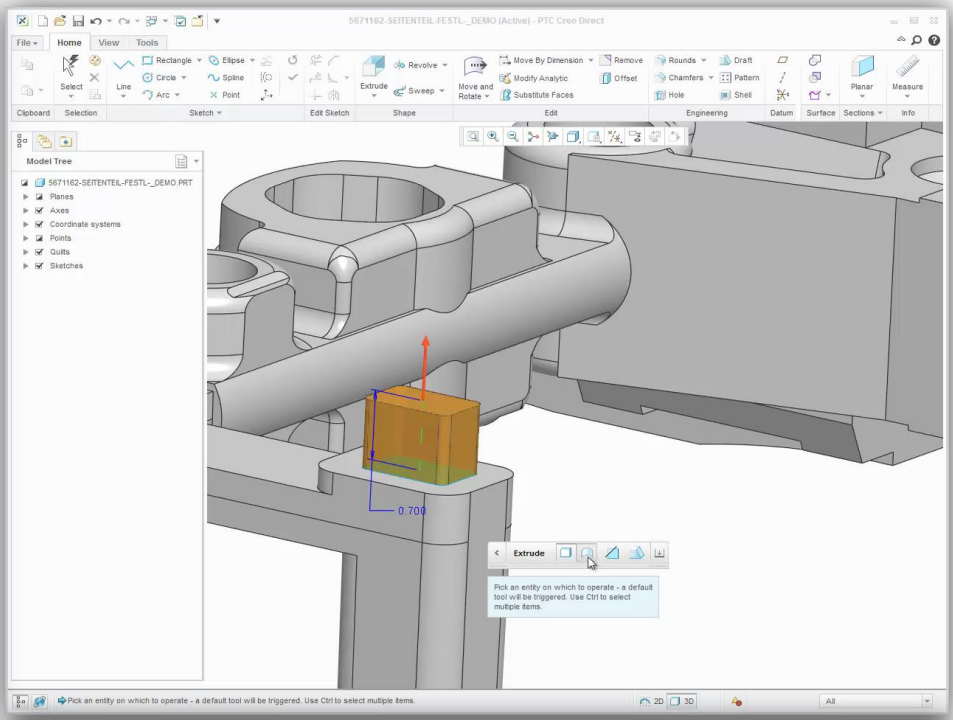
Model Tree
Planes
Axes
Coordinate systems
Points
Quilts
Sketches
Extrude
Pick an entity on which to operate - a default tool will be triggered. Use Ctrl to select multiple items.
0.700

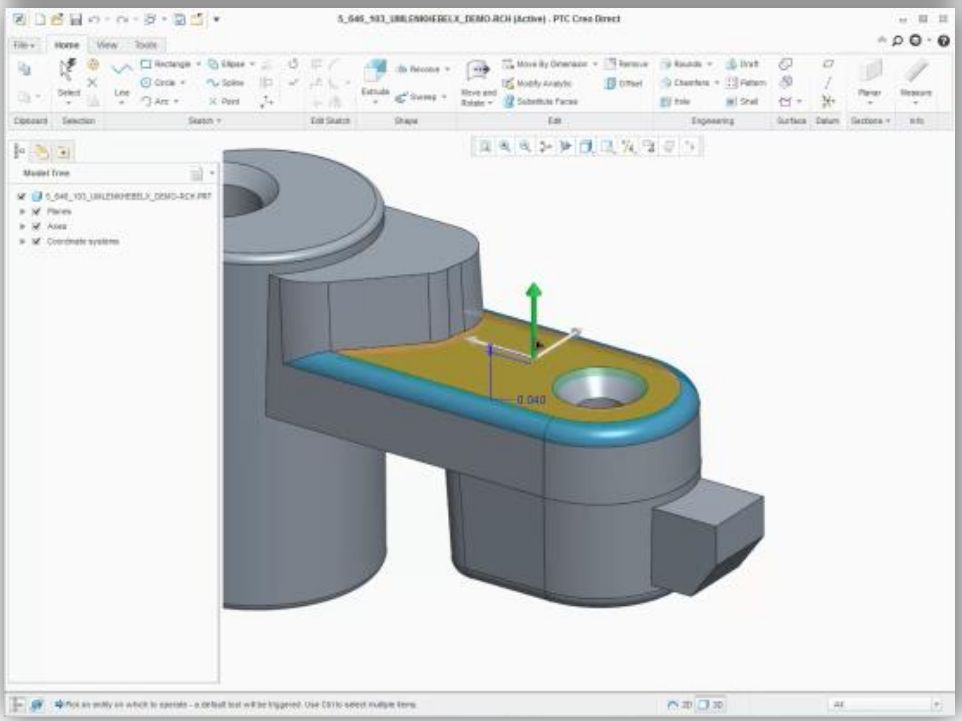
Model Tree
0.040

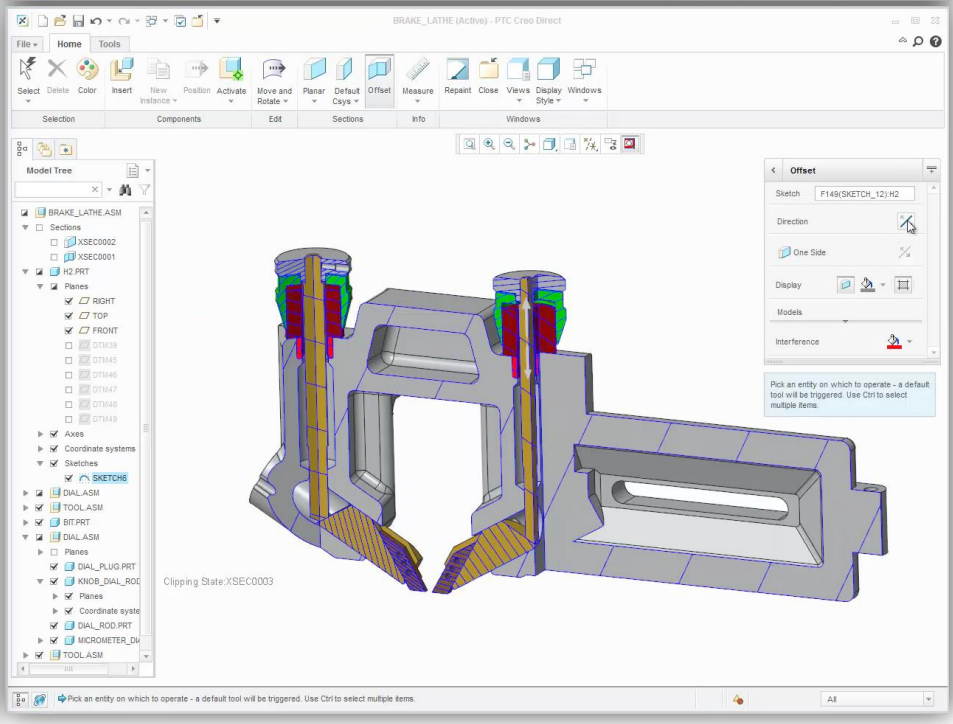
BRAKE_LATHE (Active) - PTC Creo Direct
Model Tree
BRAKE_LATHE.ASM
Sections
XSEC0002
XSEC0001
H2.PRT
Planes
RIGHT
TOP
FRONT
Axes
Coordinate systems
Sketches
SKETCH6
DIAL.ASM
TOOL.ASM
BIT.PRT
DIAL.ASM
Planes
DIAL_PLUG.PRT
DIAL_ROD.PRT
TOOL.ASM
Offset
Sketch
F149(SKETCH_12):H2
Direction
One Side
Display
Models
Interference
Pick an entity on which to operate - a default tool will be triggered. Use Ctrl to select multiple items.
Clipping State:XSEC0003

Empowering Innovation with PTC Creo 3.0

PTC®

What's new in PTC Creo Direct 3.0

- Richer and more intuitive direct modeling experience
  - Improved Live Toolbar with floating dashboards
  - Enhanced Sketching
  - Improved assembly workflows
    - Work in cross section mode
    - Smooth component/assembly reuse workflow
- More Direct Modeling Power
  - Intelligent round & chamfer handling
  - 3D solver for geometry editing & tangency control
- Import non-PTC Creo CAD formats

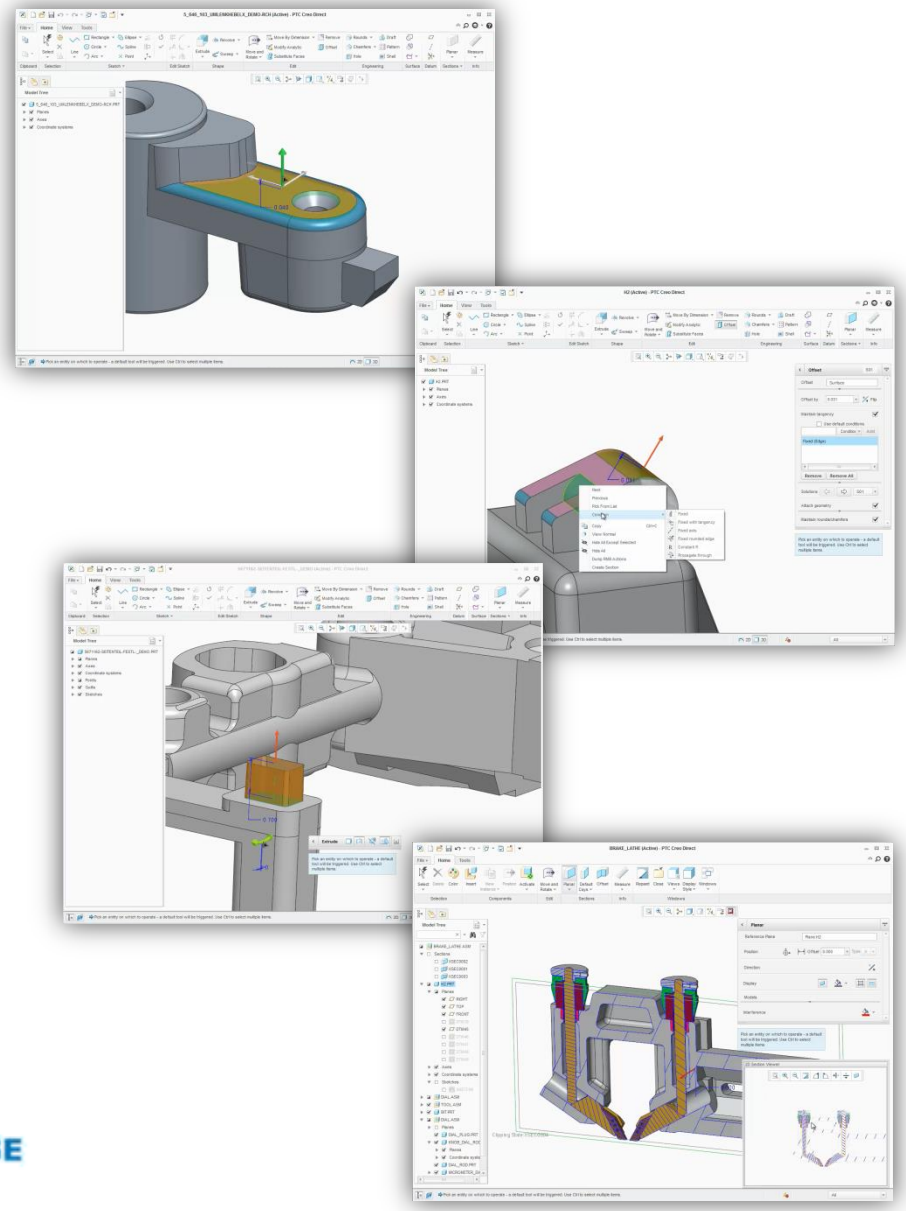

Quickly iterate parametric designs with PTC Creo Design Exploration Extension (DEX)

What is DEX?

- A dedicated environment for enabling the quick and easy investigation of alternative concept designs within the parametric environment
- A significant enhancement to the process of developing design alternatives, investigating modeling approaches and safely understanding the consequences of design changes

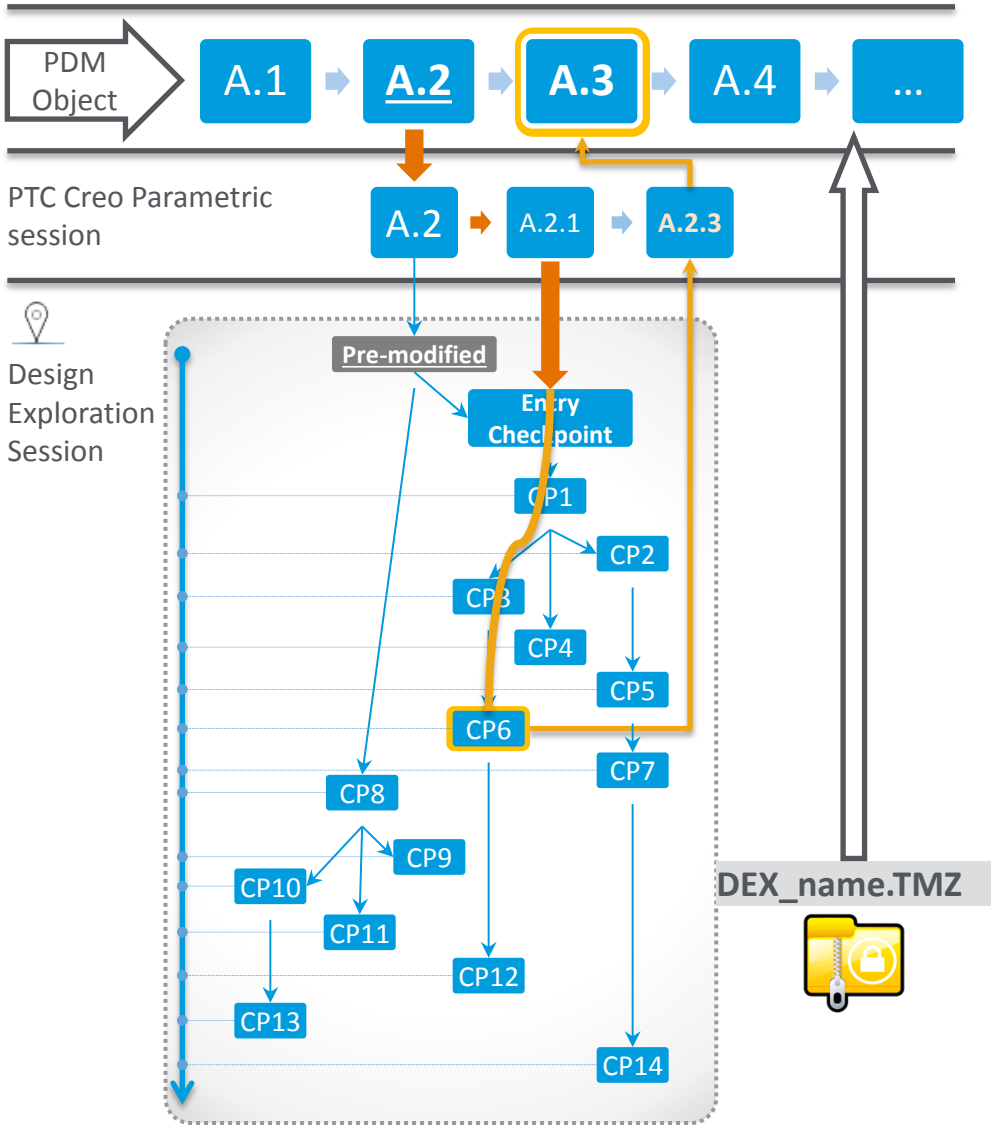

PTC Creo Design Exploration Extension

- Capabilities
  - Create unlimited checkpoints and branches of design alternatives
  - Instantly toggle between checkpoints
  - Save all checkpoints in a lightweight format for later reference
  - Store and access DEX data at any time

- Benefits
  - Explore design changes safely without risking original designs or committing to any change
  - Simultaneously develop different ideas and evaluate all options before making decisions
  - Eliminate manual data duplication and tedious session clean-up for loading and reloading different versions
  - Browse exploration checkpoints in a “decision tree” for interactive design review

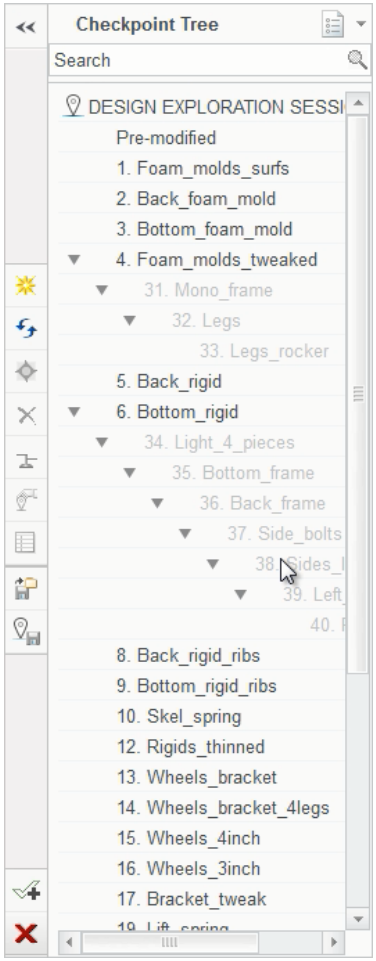

A (Active) - PTC Creo Parametric

File | Model | Analysis | Annotate | Render | Manikin | Tools | View | Applications | Framework

Operations | Get Data | Component | Datum | Cut & Surface | Modifiers | Model Display | Model Intent | Investigate

Assemble | Drag Components | Plane | Sketch | Hole | Extrude | Revolve | Pattern | Manage Views | Section | Appearance Gallery | Display Style | Component Interface | Publish Geometry | Family Table

Model Tree

- A.ASM
  - A_SKEL0001.PRT
  - ASM_RIGHT
  - ASM_TOP
  - ASM_FRONT
  - ASM_DEF_CSYS
  - WHEELS_BRACKET.PRT
  - LIFT_SPRING.ASM
  - BOTTOM_PAN.PRT
  - BACK_SPRING.ASM
  - LIFT_LEVER.PRT
  - BACK_ARM.PRT
  - BOTTOM_001.PRT
  - BACK_001.PRT
  - BACK_MOLD.PRT
  - BOTTOM_MOLD.PRT
  - Pattern 2 of COLSON-1_03351_441_MTG52BRK3.ASM
  - ARM_REST.PRT
  - Insert Here

Drag

Snapshots

Close

Select

Select 1 item.

OK | Cancel

Line 27 part BOTTOM_PAN: Invalid data type combination at right side of expression

All

Empowering Innovation with PTC Creo 3.0

PTC®

Benefits

- Seamless Interoperability
  - Use data across 2D & 3D, direct and parametric environments
- Flexibility and Control
  - Combine freeform and parametric modeling
- Support RFQ efforts
  - Quickly develop 3D concepts using direct modeling that can be used in a parametric environment
- Quickly Evaluate Design Alternatives
  - Dedicated 'Sandbox' environment supporting the development of design alternatives or design approaches

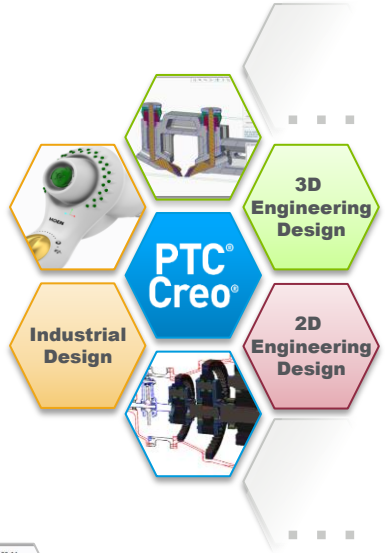

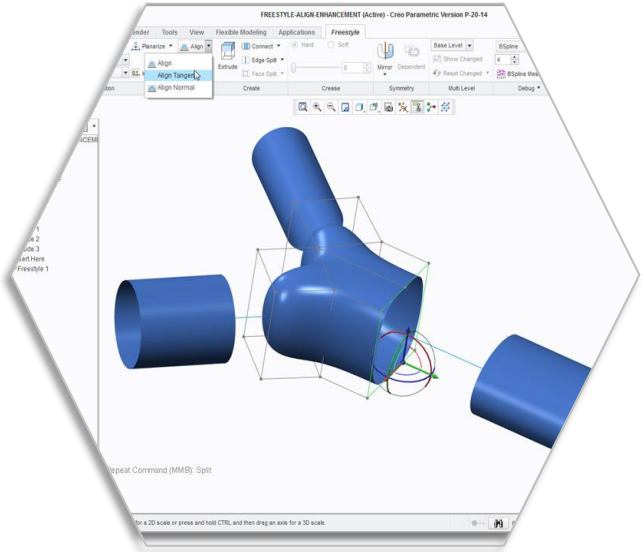

What's New in PTC Creo 3.0

PTC®

Breakthrough Multi-CAD Technology

Concept Design Improvements

PTC Creo Efficiency Improvements

PTC Creo Core Productivity Improvements

Enhancements in PTC Creo Parametric

- New Getting Started Experience
- Integrated Hardware Libraries
- Chordal Round
- New PTC Mathcad Integration*
- Redesigned Reroute
- New 3D Thickness Check
- Graphical Realism
- New Note Creation Tools and Workflows

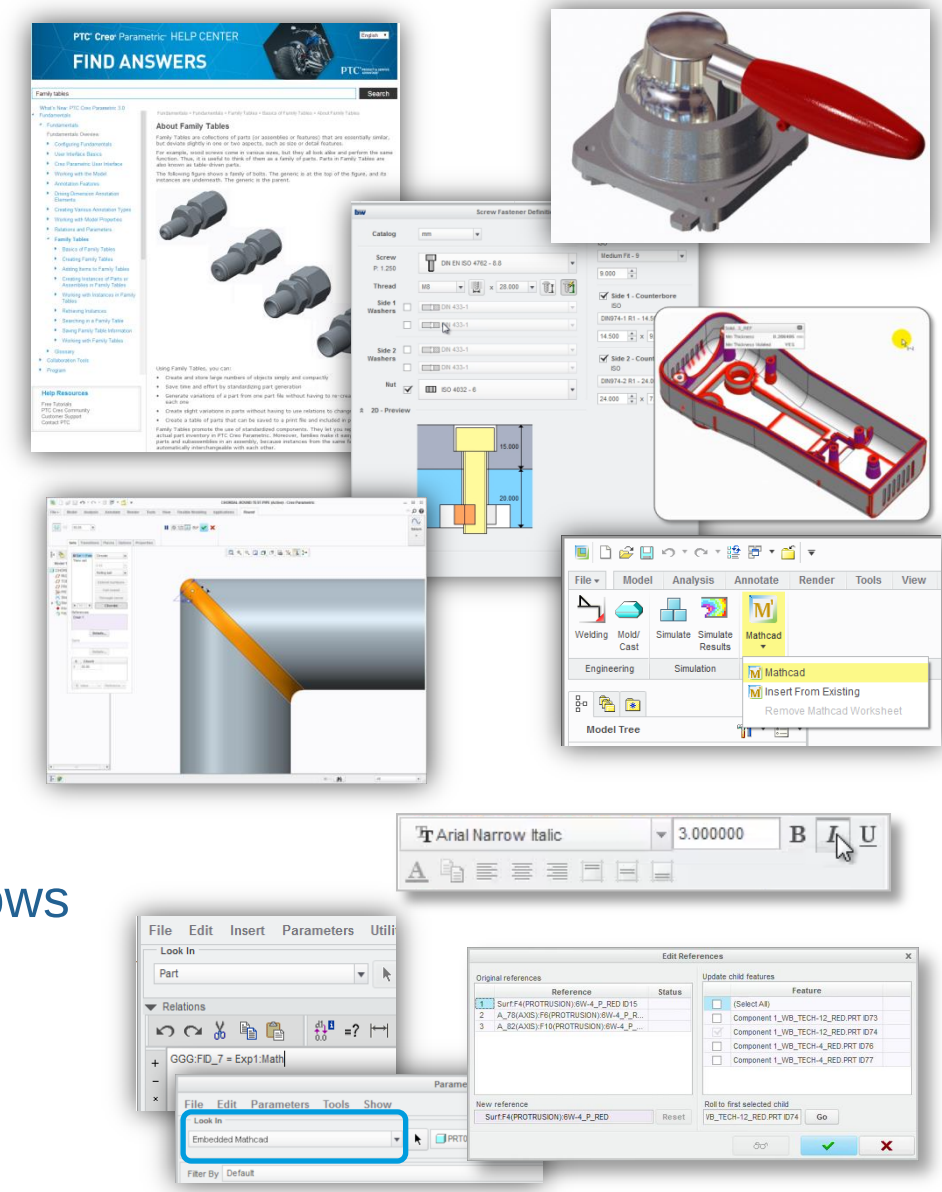

PTC Creo Parametric Core Productivity Improvements

- New Getting Started Experience
  - Revamped Help, Google indexed and searchable on the web
  - Startup Tutorials shipped with the product
  - Additional tutorials downloaded through Learning Exchange
  - 100+ What's New Videos available on Learning Exchange

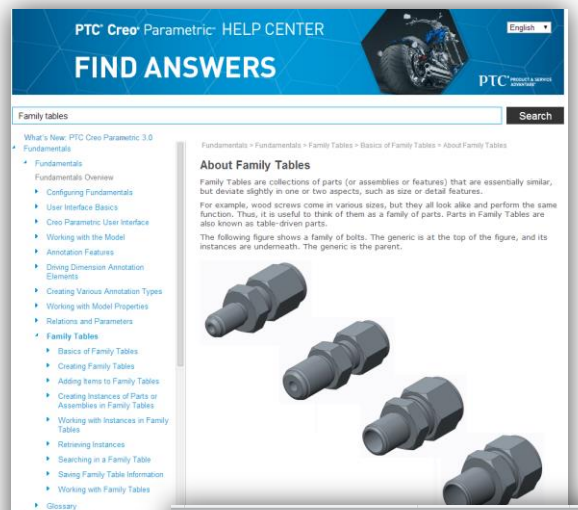

- Integrated Hardware Libraries
  - Nuts, Bolts, Washers, Screws
  - Auto hardware selection
  - Auto counterbore
  - Pattern placement

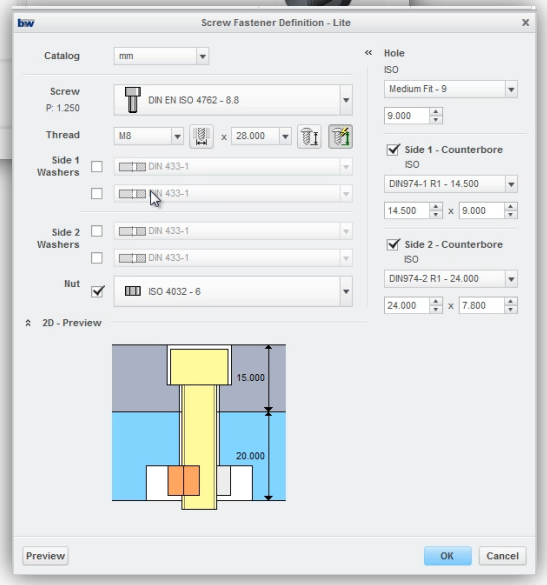

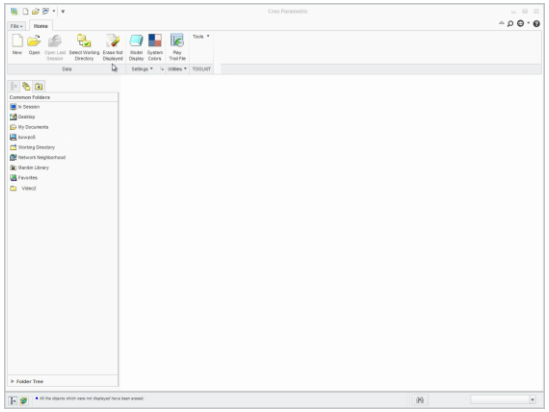

PTC Creo Parametric Core Productivity Improvements

- Chordal Round
  - Constant width useful for many cases
- New PTC Mathcad Integration
  - Mathcad Express is shipped with every seat of PTC Creo Parametric.
  - Embed Mathcad worksheet in any PTC Creo part or assembly
  - Connect input/outputs from Mathcad to parameters in PTC Creo Parametric
- Redesigned Reroute
  - Reroute simplified
  - Broader power – easily transition to multi-feature reroute
  - Retained image of lost references available to guide selection of new references

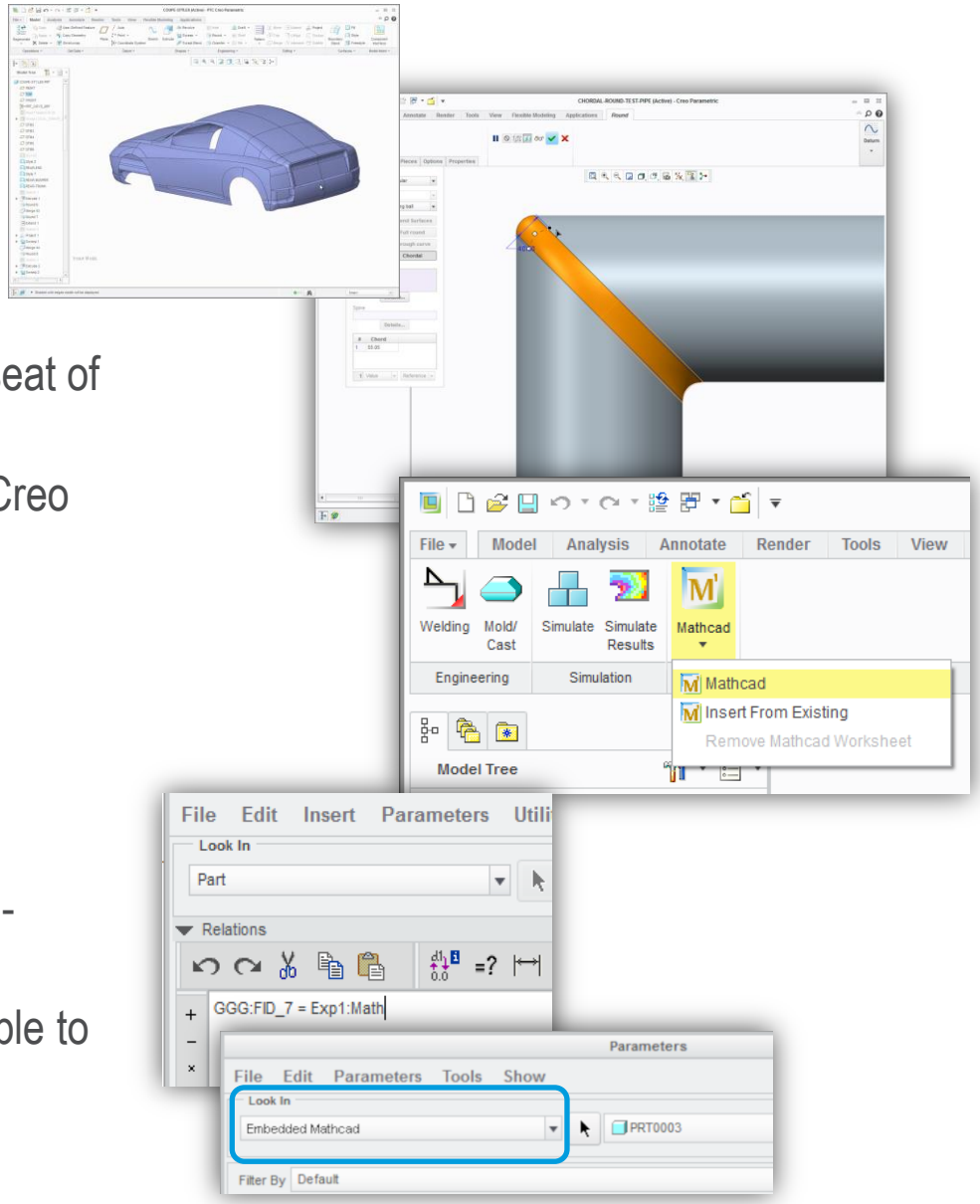

PTC Creo Parametric Core Productivity Improvements

PTC®

- New 3D Thickness Check
- Graphical Realism
- New Note Creation Tools and Workflows
  - Properties floating dashboard
  - Simple note import
  - Easy parameter mapping – no special syntax needed

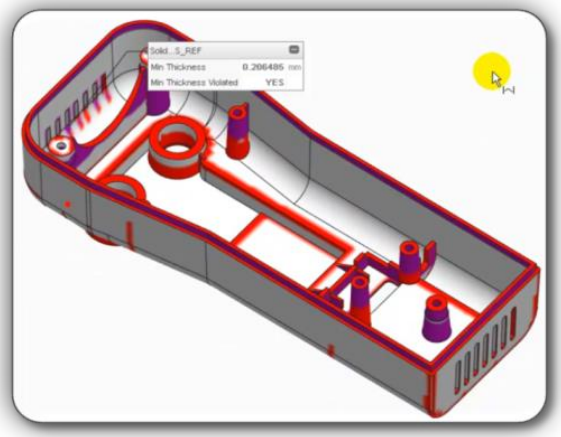

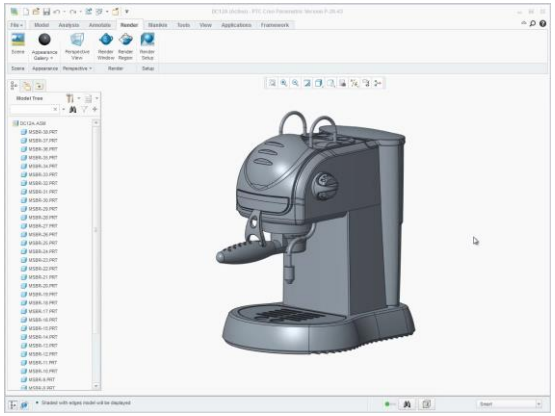

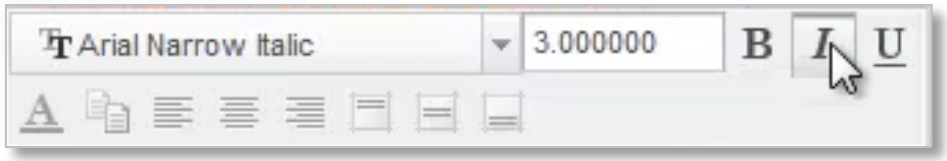

PTC Creo Core Productivity Improvements

Outside of Core PTC Creo Parametric, PTC Creo Layout and PTC Creo Direct

- PTC Creo Simulate
  - Sliding Contact with Friction
    - Finite friction for individual contact interfaces
    - Different coefficients for Static and Dynamic friction
    - Automatic calculation of maximum tangential traction, normal force, contact area, slippage coefficients
  - Contact between intent surfaces
  - All new results creation workflows and user experience

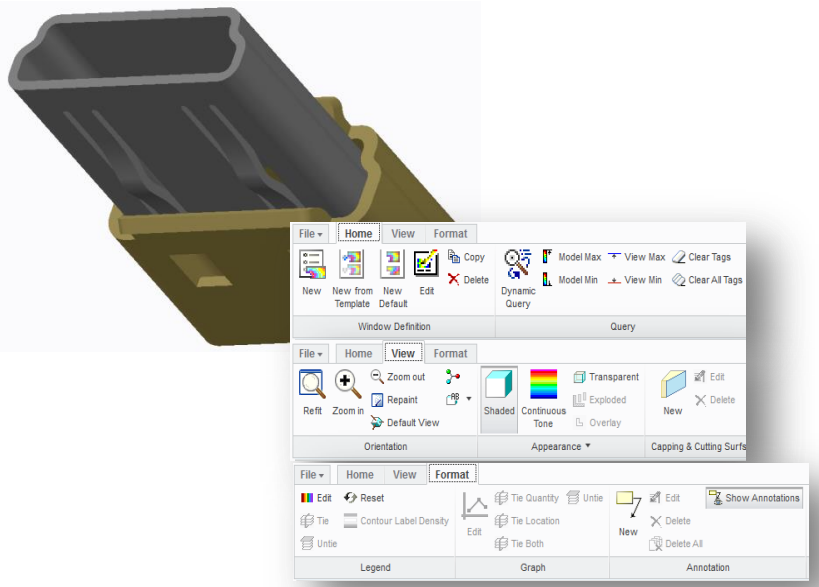

- PTC Creo Flexible Modeling Extension
  - Tangency propagation control
    - Includes Round/Chamfer handling
  - New Flex Pattern

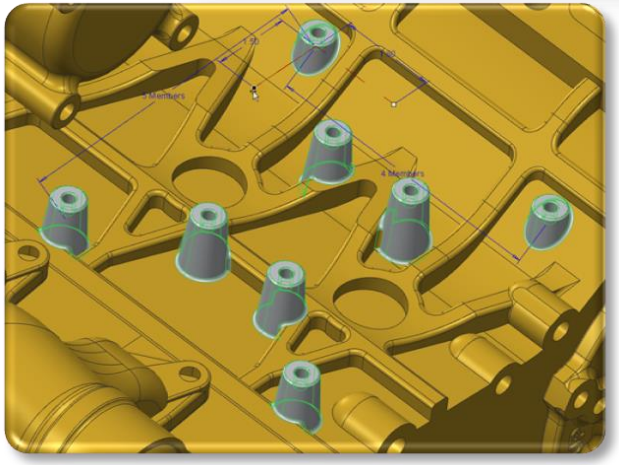

PTC Creo Core Productivity Improvements

Outside of Core PTC Creo Parametric, PTC Creo Layout and PTC Creo Direct

- PTC Creo ECAD Collaboration Extension
  - ECAD assembly type – PTC Windchill aware
  - Flex Board support
  - Improved component placement
- Harness Manufacturing Capabilities
  - New capabilities streamline harness documentation efforts
- PTC Creo NC Extension
  - Multi-task machining with four heads and two spindles
  - Volume milling workflow and technology enhancements

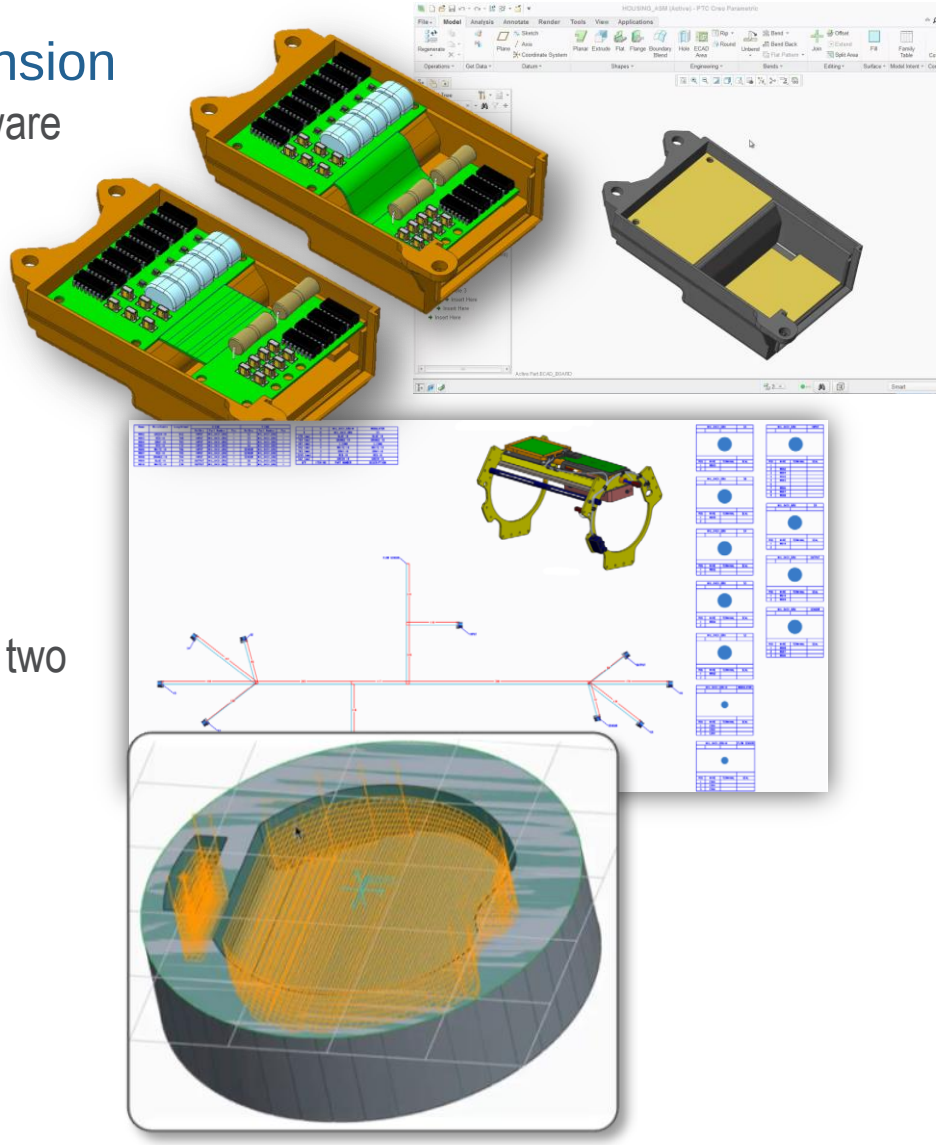

What's new in PTC Creo 3.0?

PTC®

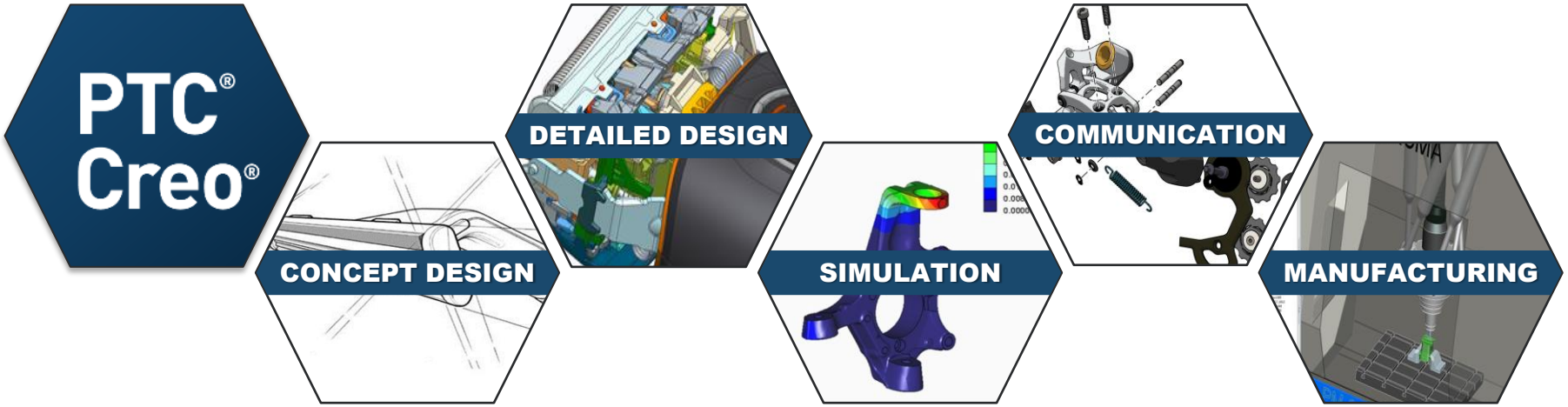

Unite Technology	Empowering Innovation	Core Productivity

Powerful new capabilities to work more effectively with data from multiple CAD sources, be more innovative and streamline everyday design tasks